FINAL ENVIRONMENTAL ASSESSMENT

ACCELERATED NEUTRALIZATION OF CHEMICAL AGENT AND OFF-SITE SHIPMENT OF LIQUID PROCESS EFFLUENTS AT THE NEWPORT CHEMICAL AGENT DISPOSAL FACILITY

July 2002

Prepared for the
U.S. Department of the Army
Program Manager for Chemical Demilitarization

Prepared by the
OAK RIDGE NATIONAL LABORATORY
Oak Ridge, Tennessee 37831-6200
managed by
UT-BATTELLE
for the
U.S. DEPARTMENT OF ENERGY
under contract DE-AC05-00OR22725

FINAL ENVIRONMENTAL ASSESSMENT

ACCELERATED NEUTRALIZATION OF CHEMICAL AGENT AND OFF-SITE SHIPMENT OF LIQUID PROCESS EFFLUENTS AT THE NEWPORT CHEMICAL AGENT DISPOSAL FACILITY

Prepared under the supervision of:

Charles D. Galloway P.E.
Site Project Manager,
Office of the Project Manager for Alternative Technologies and Approaches
Newport Chemical Agent Disposal Facility

Legally Sufficient:

Phil Lower
Counsel, Office of the Program Manager for Chemical Demilitarization

Approved by:

7/21/02

Joseph F. Marquart
Lieutenant Colonel, Chemical Corps
Commanding

[This page intentionally left blank]

CONTENTS

LIST OF FIGURES v

LIST OF TABLES v

ACROYNMS AND ABBREVIATIONS vii

1. PURPOSE OF AND NEED FOR THE PROPOSED ACTION 1-1
   - 1.1 INTRODUCTION 1-1
   - 1.2 PURPOSE OF AND NEED FOR THE PROPOSED ACTION 1-3
   - 1.3 REQUIREMENT FOR ADDITIONAL EA 1-4
   - 1.4 REFERENCES 1-4

2. PROPOSED ACTION AND ALTERNATIVE 2-1
   - 2.1 NO-ACTION ALTERNATIVE—NEUTRALIZATION/SCWO WITHOUT THE EVAPORATOR CRYSTALLIZER 2-1
   - 2.2 PROPOSED ACTION—ACCELERATED AGENT NEUTRALIZATION AND OFF-SITE SHIPMENT OF LIQUID EFFLUENT 2-7
   - 2.3 REFERENCES 2-9

3. EXISTING ENVIRONMENT AND POTENTIAL ENVIRONMENTAL CONSEQUENCES 3-1
   - 3.1 SCOPE OF THE ENVIRONMENTAL ANALYSIS 3-1
   - 3.2 ENVIRONMENTAL SETTING 3-2
   - 3.3 ENVIRONMENTAL ANALYSIS 3-4
     - 3.3.1 Air Quality 3-4
       - 3.3.1.1 Affected environment 3-4
       - 3.3.1.2 No-action alternative 3-4
       - 3.3.1.3 Proposed action 3-4
     - 3.3.2 Water Resources 3-5
       - 3.3.2.1 Affected environment 3-5
       - 3.3.2.2 No-action alternative 3-7
       - 3.3.2.3 Proposed action 3-8
     - 3.3.3 Land Use and Ecological Resources 3-10
       - 3.3.3.1 Affected environment 3-10
       - 3.3.3.2 No-action alternative 3-10
       - 3.3.3.3 Proposed action 3-10
     - 3.3.4 Threatened and Endangered Species 3-11
       - 3.3.4.1 Affected environment 3-11
       - 3.3.4.2 No-action alternative 3-11
       - 3.3.4.3 Proposed action 3-12

3.3.5 Waste Disposal 3-13
3.3.5.1 Affected environment 3-13
3.3.5.2 No-action alternative 3-13
3.3.5.3 Proposed action 3-14
3.3.6 Transportation 3-15
3.3.6.1 Affected environment 3-15
3.3.6.2 No-action alternative 3-16
3.3.6.3 Proposed action 3-17
3.3.7 Socioeconomics 3-20
3.3.7.1 Affected environment 3-20
3.3.7.2 No-action alternative 3-21
3.3.7.3 Proposed action 3-22
3.3.8 Human Health and Safety 3-23
3.3.8.1 Affected environment 3-23
3.3.8.2 No-action alternative 3-23
3.3.8.3 Proposed action 3-25
3.3.9 Cultural, Archaeological, and Historic Resources 3-28
3.3.9.1 No-action alternative 3-28
3.3.9.2 Proposed action 3-28
3.3.10 Environmental Justice 3-29
3.3.10.1 No-action alternative 3-29
3.3.10.2 Proposed action 3-31
3.3.11 Cumulative Effects 3-31
3.3.11.1 No-action alternative 3-31
3.3.11.2 Proposed action 3-32
3.3 REFERENCES 3-32

4. CONCLUSIONS 4-1

5. AGENCIES AND PERSONS CONTACTED 5-1

APPENDIX A: Records of Environmental Consideration A-1

APPENDIX B: Physical, Chemical, and Toxicological Characteristics of Products of VX Hydrolysis B-1

APPENDIX C: Acquisition Decision Memorandum C-1

LIST OF FIGURES

2.1. Overview of proposed neutralization/supercritical water oxidation process.....2-3
2.2. Agent VX neutralization process 2-4
2.3. Schematic diagram of the supercritical water oxidation process 2-5
3.1. Regional map of the Newport Chemical Depot area.....3-3
3.2. Surface water features and drainage at Newport Chemical Depot.....3-6

LIST OF TABLES

3.1. Expected fatalities, injuries, and accidents involving trucks carrying SCWO brine, VX hydrolysate, or treated hydrolysate from NECDF to off-site treatment, storage, and/or disposal facility..... 3-18

3.2. Expected fatalities, injuries, and accidents involving rail transportation of SCWO brine, VX hydrolysate, or treated hydrolysate from NECDF to off-site treatment, storage, and/or disposal facility 3-19

3.3. Minority and low-income populations residing in the five-county socioeconomic impact area..... 3-30

[This page intentionally left blank]

ACROYNMS AND ABBREVIATIONS

CDB	Chemical Demilitarization Building
CFR	*Code of Federal Regulations*
CHATS	chemical agent transfer system
DPE	demilitarization protective ensembles
EA	Environmental Assessment
EC	evaporator/crystallizer
EMPA	ethyl methylphosphonic acid
EPA	U.S. Environmental Protection Agency
FEIS	Final Environmental Impact Statement
FOTW	federally owned treatment works
FTE	full-time equivalent
IDEM	Indiana Department of Environmental Management
IDHPA	Indiana Division of Historic Preservation and Archaeology
IDNR	Indiana Department of Natural Resources
LOS	level of service
MPA	methylphosphonic acid
NAAQS	National Ambient Air Quality Standards
NECD	Newport Chemical Depot
NECDF	Newport Chemical Agent Disposal Facility
NEPA	National Environmental Policy Act
NRC	National Research Council (of the National Academy of Sciences)
ORNL	Oak Ridge National Laboratory
PPE	personal protective equipment
RCRA	Resource Conservation and Recovery Act
RDA	Research, Development and Acquisition
REC	Record of Environmental Consideration
ROD	Record of Decision
SCWO	supercritical water oxidation
SR	state route

TC	ton container
TCC	ton container cleanout
TSDF	treatment, storage, and disposal facility
UB	utility building
USD AL&T	Under Secretary of Defense for Acquisition , Logistics and Technology
VX	a chemical nerve agent chemical name = o-ethyl S-[2-(diisopropylamino)ethyl] methylphosphonothiolate; chemical formula = $C_{11}H_{26}NO_2PS$

Units of Measure and Chemical Formulas

°C	degrees Celsius
CO_2	carbon dioxide
°F	degrees Fahrenheit
ft	foot or feet
ft^3	cubic feet
gal	gallons
gal/day	gallons per day
gal/min	gallons per minute
hr	hours
kg	kilogram
lb	pounds
Fm	micrometers
mi	mile
mg	milligram
min	minutes
mL	milliliter
mph	miles per hour
NaOH	sodium hydroxide
ppb	parts per billion
ppm	parts per million
psi	pounds per square inch
psig	pounds per square inch (gauge)
wt %	weight percent

1. PURPOSE OF AND NEED FOR THE PROPOSED ACTION

1.1 INTRODUCTION

This Environmental Assessment (EA) has been prepared by the U.S. Army to supplement the Final Environmental Impact Statement (FEIS) for the pilot testing of neutralization/ supercritical water oxidation (SCWO) of agent VX at Newport Chemical Depot (NECD), Indiana (U.S. Army 1998). That document is subsequently referred to in this document as the FEIS. The 1998 FEIS evaluated the environmental impacts of conducting a pilot test of on-site neutralization followed by SCWO for the destruction of the bulk nerve agent VX currently stored in ton containers (TCs) at the NECD. The Record of Decision (ROD) for the FEIS determined that pilot testing of the neutralization/SCWO process should proceed at NECD. Accordingly, the Newport Chemical Agent Disposal Facility (NECDF) is currently under construction.

The proposed action in the 1998 FEIS involved neutralization of VX using aqueous sodium hydroxide (NaOH), referred to as "caustic," followed by treatment of the resulting liquid waste stream (hydrolysate) through an on-site SCWO unit that would reduce the hydrolysate to inorganic salts and water (i.e., brine solution). The brine solution was to be treated in an evaporator/crystallizer (EC) unit that would remove most of the water, producing distilled water and wet brines. In this case, most of the distilled water was to be recycled into the neutralization process, with less than 1 gal/min being discharged to the federally owned treatment works (FOTW) at NECD, then into the Wabash River near NECD.

Since the FEIS was published, the Army has pursued methods for accelerating the process of destroying chemical agent by neutralization. Process advances have been proposed in the caustic neutralization of the chemical agent to accelerate the overall program as originally described in the FEIS.

The Army has also continued to explore the availability of off-site treatment, storage, and disposal facilities (TSDFs) that could treat or dispose of the liquid effluent, either SCWO brines or hydrolysate, and has identified several potential sites with such capabilities. One study (Parsons 2000) indicates that off-site disposal of the SCWO brines is likely to be beneficial from both cost and risk perspectives and that off-site brine disposal is technically and operationally

simpler than building and operating an EC. Furthermore, the National Research Council (NRC) has recommended that "the Army should evaluate off-site management of hydrolysates both for potential cost and schedule benefits and as a contingency plan in case difficulties arise during start-up and pilot testing of the on-site (postneutralization) process steps" (NRC 2000). These developments have supported the Army's continued investigation of off-site treatment and disposal of hydrolysate or SCWO brines.

As a result of the findings of the above studies, and in compliance with the National Environmental Policy Act (NEPA), the Army has prepared a Record of Environmental Consideration (REC) (see Appendix A), which supports the elimination of the EC from the neutralization/SCWO process. Brine solutions resulting from the SCWO process would be shipped to a permitted off-site facility. In this assessment, the elimination of the EC is, therefore, considered part of the base case or no-action alternative.

The Army's evaluation of TSDFs that could receive hydrolysate has revealed three potential types of TSDFs: incinerators, deep well injection facilities, and biological treatment facilities. The types of TSDFs are listed in the order of increasing secondary treatment that may be needed to meet the waste acceptance criteria (in their respective permits). The secondary treatment could occur either on-site at NECDF or at the TSDF location if it has the capability to perform the treatment. A number of incineration TSDFs require no additional treatment of the hydrolysate, while biological treatment facilities require the most additional treatment (beyond neutralization) to meet the TSDFs' waste acceptance criteria.

Individual TSDF evaluation or a TSDF technology evaluation is beyond the scope of this EA. If the NEPA process concludes with the Army making a decision to dispose of the liquid effluent off-site, the Army will evaluate appropriate TSDFs during a contractor selection process which will consider environmental factors as well as the requirements of the Federal Acquisition Regulations. The Army will consider comments received during the public comment period on the EA with respect to the TSDF technology or an individual TSDF in any subsequent TSDF contractor selection process. The EA is being made public in the community surrounding the Newport Chemical Depot in Newport, Indiana, and in communities surrounding potential TSDFs.

This EA has been prepared in compliance with NEPA and with Army Regulation 200-2. It considers in more detail the potential environmental consequences of advances in accelerating the neutralization process and in the secondary treatment and/or transport and off-site disposal of the liquid effluent.

1.2 PURPOSE OF AND NEED FOR THE PROPOSED ACTION

The proposed action evaluated in this EA is to destroy the entire NECD stockpile of chemical agent by an accelerated neutralization process and to dispose of the liquid effluent (hydrolysate) produced by the neutralization process at an authorized off-site TSDF either with or without additional secondary treatment on-site at the NECDF. The purpose of the proposed action is to eliminate the hazards associated with the stored chemical agent in a safe, environmentally acceptable, expedient, and cost-effective manner.

Because of the terrorist attacks of September 11, 2001, and because of the continuing and immediate threat of further terrorist attacks on the United States, President Bush declared a national emergency by Proclamation 7463 on September 14, 2001. In light of the national emergency, the Army determined that it is necessary for the stockpile of VX at NECD to be destroyed expeditiously and in a manner that does not pose a threat to public health and the environment.

Action is needed to reduce the time for destroying the NECD stockpile of agent VX. Accelerating destruction of the VX stockpiled at NECD contributes to improved public safety by more quickly removing the risks of continued storage of VX (e.g., risks of VX releases caused by accidents, natural disasters, and acts of terrorism).

This EA compares the FEIS agent neutralization process with accelerated neutralization processes. It also evaluates the off-site shipment of the hydrolysate for disposal at a TSDF. The hydrolysate that would be shipped off-site for disposal under the proposed action would be classified a hazardous waste under Indiana regulations unless the SCWO treatment option was employed. The SCWO effluent produced by Alternative 1 has been "delisted"[1] and, therefore, is classified nonhazardous. Appendix B provides a description of the hydrolysate characteristics and composition.

The analysis in this EA primarily addresses impacts that could occur in the vicinity of NECD. It is recognized that some impacts that would be avoided or reduced at NECD could be

[1] "Delisting" is a rulemaking procedure by which facilities, if successful, are relieved of the obligation to manage specific wastes as hazardous in accordance with Resource Conservation and Recovery Act (RCRA). The U.S. Environmental Protection Agency (EPA) or a state agency defines wastes as hazardous by listing them in published environmental regulations (e.g., 40 CFR 261, Subpart D). However, a specific facility might generate a waste that does not exhibit any hazardous characteristics for which the waste was listed and does not present a hazard to either human health or the environment for any other reason. Therefore, to avoid placing any unnecessary regulatory burden on such facilities, RCRA regulations provide a petition process for case-by-case exclusions or "delistings" of specific wastes from the hazardous waste lists. The Indiana Department of Environmental Management (IDEM) approved the Army's petition for delisting SCWO effluent at NECD (IDEM letter, June 18, 1999, "VX Delisting Petition Newport Chemical Depot, IN1210022272").

transferred to a receiving TSDF. However, the permitted off-site TSDF selected for treatment and disposal of NECDF waste streams would be audited to ensure that the facility is safely treating the hydrolysate in accordance with applicable federal, state, and local regulations and the TSDF's environmental operating permits. These regulations and permits would ensure that disposal of the liquid effluents from the NECDF would be conducted in a safe and environmentally acceptable manner.

1.3 REQUIREMENT FOR ADDITIONAL EA

On the basis of studies regarding neutralization technologies—initiated by the Army and performed by both the Army and other organizations (e.g., the NRC)—the Under Secretary of Defense for Acquisitions, Logistics and Technology (USD AL&T) and the Assistant Secretary of the Army for Research, Development and Acquisition (RDA), in memoranda dated January 17 and January 29, 1997, authorized the preparation of environmental impact analyses to construct and operate pilot test facilities to demonstrate neutralization processes at both Aberdeen Proving Ground, Maryland, and NECD [see Exhibits A.1 and A.2 in Appendix A of the NECDF FEIS (U.S. Army 1998)]. The FEIS was completed in December 1998 and stipulated that prior to full-scale operations the Army would complete an EA for consideration by the USD AL&T.

Following the events of September 11, 2001, the USD AL&T, by Acquisition Decision Memorandum dated May 11, 2002 (Appendix C), authorized the U.S. Army Program Manager for Chemical Demilitarization to commence with the accelerated destruction of the VX stockpile located at NECD, in compliance with the appropriate environmental laws and regulations. This EA is being prepared for consideration by the USD AL&T for the accelerated destruction of the entire VX stockpile located at NECD, and will satisfy the requirement for additional environmental assessment before operations at NECDF, should that become the final decision of the Army.

1.4 REFERENCES

NRC (National Research Council) 2000. *Integrated Design of Alternative Technologies for Bulk-Only Chemical Agent Disposal Facilities*, National Academy Press, Washington, D.C.

Parsons 2000. *Addendum to NECDF Brine Processing and Disposal Study*, prepared under contract DAAA 09-99-C-0016, CLIN 1403, by Parsons Corporation, Parsons Infrastructure and Technology Group, Pasadena, Ca., for the U.S. Army Corps of Engineers, Huntsville, Ala., and Product Manager for Alternative Technologies and Approaches, Aberdeen Proving Ground, Md., October.

U.S. Army 1998. *Pilot Testing of Neutralization/Supercritical Water Oxidation of Agent VX at Newport Chemical Depot, Indiana: Final Environmental Impact Statement*, Program Manager for Chemical Demilitarization, Aberdeen Proving Ground, Md., December.

[This page intentionally left blank]

2. PROPOSED ACTION AND ALTERNATIVE

The proposed action is accelerated neutralization of the VX nerve agent stored in ton containers at NECD, chemical and physical treatment of hydrolysate as necessary, and transportation of the hydrolysate to a Resource Conservation and Recovery Act (RCRA) permitted TSDF for disposal. The two key differences between the no-action and the accelerated neutralization alternatives are: (1) accelerated destruction would be achieved by using a manually operated Chemical Agent Transfer System (CHATS) instead of the robotically operated Ton Container Cleanout (TCC) line to open the TCs and drain the VX;[1] and (2) hydrolysate resulting from accelerated neutralization would be shipped off-site for disposal. A possible backup accelerated approach, would add cost and would delay complete disposal by requiring construction of an above-ground tank farm for storage of the hydrolysate to accommodate additional SCWO process development.

2.1 NO-ACTION ALTERNATIVE—NEUTRALIZATION/SCWO WITHOUT THE EVAPORATOR CRYSTALLIZER

Analysis of the no-action alternative is required by NEPA and Army regulations. The no-action alternative provides a benchmark against which other alternatives can be compared. In this case, the no-action alternative is not useful for an accelerated schedule because the robotic processing of TCs is much slower than the manual processing used in the proposed action. Furthermore, technical problems with the reliability of the SCWO technology have been discovered since publication of the FEIS. Although the technical problems appear to be solvable, a significant time delay appears inevitable.

The no-action alternative—neutralization/SCWO without the EC unit and off-site shipment of the SCWO brines—is based on the proposed action described in the FEIS. As

[1]The CHATS is a glovebox that the Army has used successfully for 15 years for opening and draining TCs. A TC is inserted into one side of the CHATS, and the connection is sealed with an air bladder. The valves or drain plugs on the end of the TC inside the CHATS are opened manually by a worker standing outside the glovebox and manipulating tools inside the glovebox. The TCC line functions by robotically emptying and cleaning TCs. The TC is carried by conveyor through several consecutive, isolated chambers in which it is punched, drained of liquid, rinsed with high pressure spray, cut in half, steam cleaned, and tested for agent to ensure decontamination.

described in the FEIS, the no-action alternative involves processing (during pilot testing) of up to 615 of the total inventory of ton containers stored at NECD. However, to distinguish the impacts of changes to the process from the impacts of processing all the inventory, impacts of the no-action alternative are reported for the entire inventory of ton containers.

The NECDF, as described in the FEIS, would use caustic neutralization for destruction of VX, followed by SCWO treatment of the hydrolysate to eliminate organic compounds. Figure 2.1 shows a schematic overview of the proposed disposal process for VX and hydrolysate. The primary waste product generated by the SCWO unit would be dissolved sodium salts of sulfur and phosphorous in water (called SCWO effluent or brine solution).

Individual ton containers of VX would be moved from their storage location to the proposed facility for processing. Before neutralization, holes would be punched in the containers by remote control, allowing the agent VX to be pumped into a holding tank. Empty containers would be flushed with hot water, cut into halves, then cleaned with high-pressure water and steam, and dried. After cleaning, the containers would be monitored to ensure decontamination to the Army's 3X level and then sent off-site to the Rock Island Arsenal for 5X thermal treatment, smelting and recycling. Recycling the ton containers would yield approximately 2.7 million lb of carbon steel.

Caustic neutralization of drained VX would be accomplished in a reactor by mixing the agent with a 20% solution of NaOH in water at 90°C (194°F); see Fig. 2.2. In the ensuing hydrolysis reaction, VX would be destroyed, producing a liquid effluent (hydrolysate) that would consist primarily of water and NaOH, with small amounts of the sodium salts of ethyl-methylphosphonic acid (EMPA) and of an amino thiol compound. The solution used to decontaminate the empty containers would be processed in a second neutralization reactor, which would also receive the hydrolysate from the drained agent reactor. There is little solid residue from this process. After completion of neutralization, the hydrolysate from the second reactor would be treated at an on-site SCWO facility. Approximately 950 gal of hydrolysate is produced per ton container by the processes in the no-action alternative.

The purpose of the SCWO unit would be to convert nearly all organic compounds to carbon dioxide (CO_2), water, and inorganic salts (Fig. 2.3). The hydrolysate produced during the neutralization step would become the feed to the SCWO process. In the SCWO process, the feed liquid (hydrolysate) would be pumped at high pressure, about 3,500 psi, and heated to an operating temperature of about 650°C (1,200°F). The hydrolysate would then be mixed with oxygen and substantial quantities of water in the SCWO reactor vessel. The resulting supercritical

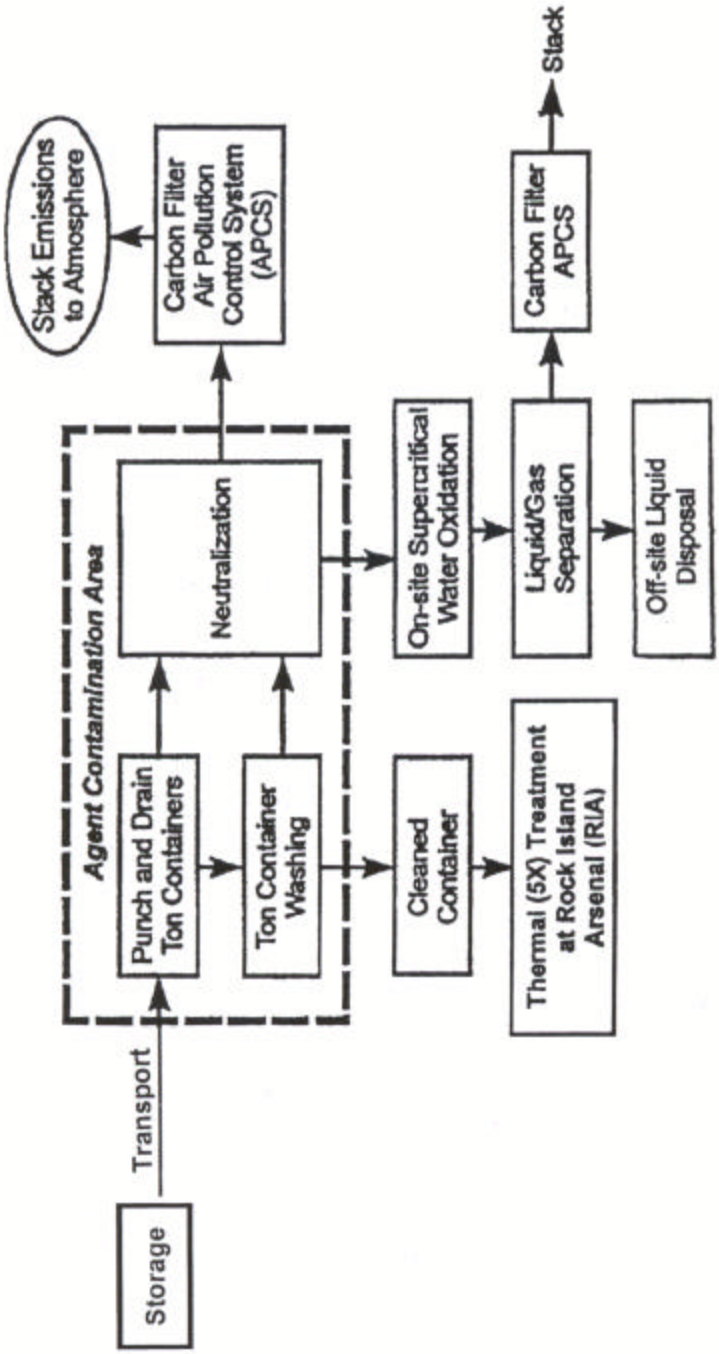

Figure 2.1 Overview of proposed neutralization/supercritical water oxidation process.

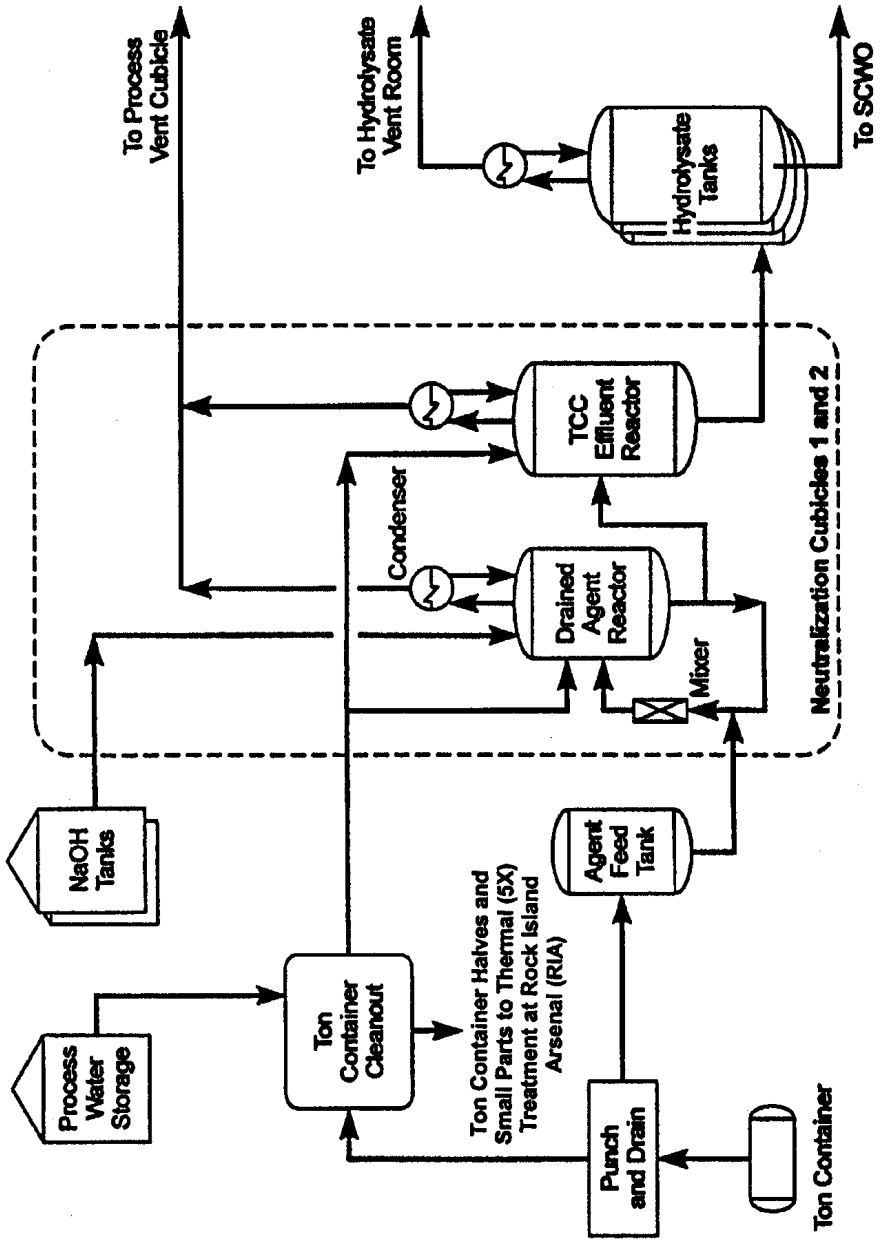

Figure 2.2 VX neutralization process.

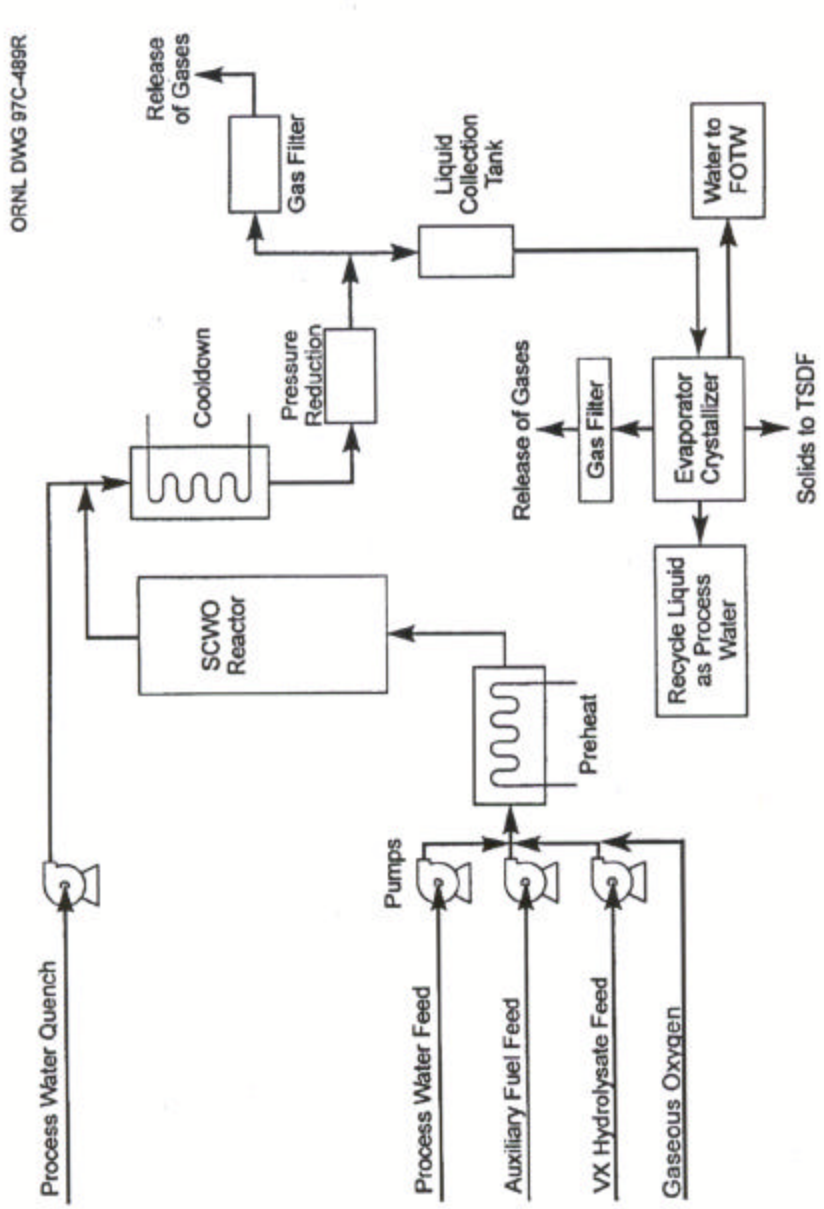

Figure 2.3. Schematic diagram of the supercritical water oxidation process. *Source:* SWEC 1997.

fluid would be a very dense gas phase in which the salts produced during the oxidation of the hydrolysate would be insoluble while the organic components would be soluble.

After the completion of the SCWO process, the liquids and gases would be cooled (with quench water) and separated following pressure reduction. The gases, mostly CO_2, would be discharged to a cascade filtration system and then to the atmosphere. The salts generated by the SCWO unit would consist primarily of sodium sulfate and sodium phosphate. The liquid phase (which would include the dissolved salts) would be shipped to an off-site disposal facility. The SCWO effluent has been "delisted" (see Sect. 1.2, footnote 1) and would not be considered a hazardous waste. Consequently, the off-site disposal facility would not have to be permitted for hazardous wastes.

Because there would be no EC unit, there would be no recycle of water to the neutralization and SCWO processes. Consequently, this alternative would require more process water than the process described in the FEIS. On the other hand, the EC would require large quantities of fuel to dry the brine and large quantities of cooling water to condense the water driven out of the brine. The EC cooling tower would also use makeup water and produce blow-down that would be discharged to the FOTW. Neutralizing the contents of 615-ton containers of agent VX would generate about 580,000 gal of hydrolysate. Processing the 580,000 gal of hydrolysate through the SCWO unit would produce about 5.4 million gal of SCWO effluent.

Most semi-trailer tankers range in size between 4,000 and 6,000 gal capacity. Assuming the lower capacity is typical of the trailers employed to transport SCWO effluent, about 1,350 shipments would be needed to ship the 5.4 million gal of SCWO effluent off-site. If the pilot test period required 240 days, an average of 5 to 6 truckloads per day would be shipped. Because production during the first 3 months would be at a lower rate, the production rate during the final 5 months [96 containers per month (U.S. Army 1998, Sect. 2.2.1)] would require 25% more shipments per day than the average. During the final 5 months, 6 to 7 truckloads per day would be needed to ship the SCWO effluent off-site.

If the pilot test were to be extended to treatment of the whole inventory (see Sect. 2.1), neutralizing the agent VX from the whole inventory would generate about 1.6 million gal of hydrolysate. Processing that hydrolysate through the SCWO would produce about 15 million gal of SCWO effluent (i.e., brines). About 3,750 shipments would be needed to ship the 15 million gal of brine to an off-site disposal facility. In addition, following operations, about 5,100 lb of activated carbon filters from neutralization, SCWO unit, and other air filtration systems would be disposed of at a TSDF. No charcoal would need to be disposed of during operations.

2.2 PROPOSED ACTION—ACCELERATED AGENT NEUTRALIZATION AND OFF-SITE SHIPMENT OF LIQUID EFFLUENT

Under this alternative, it is assumed that the hydrolysate would be treated off-site. The VX destruction reaction is similar to the no-action alternative (e.g., neutralization using a NaOH solution); but instead of remotely operated draining of the TCs through the TCC in the Chemical Demilitarization Building (CDB), the agent would be manually drained from the TC by using CHATS and neutralized in a single pair of reactors. With CHATS, up to 10 TCs can be processed at a time, whereas with the TCC line, only 1 TC can be processed at a time.

The NECDF would be modified by installing five dual CHATS in an existing NECDF building. Two batch neutralization reactors would also be installed in this NECDF building. Ton containers would be transferred to the NECDF building where they would be drained using CHATS. The reactors would be used for neutralization of VX by reacting agent with a NaOH solution at 90°C (194°F). The accelerated neutralization uses two reactors operating in parallel instead of the no-action alternative's four reactors operating in two parallel series of two reactors. This configuration produces a more concentrated hydrolysate. The volume of resulting hydrolysate is approximately half the volume of the no-action alternative (approximately 900,000 gal). Double-walled piping would be built to transfer hydrolysate from the building to existing storage tanks. Loading facilities would be constructed next to the storage tanks to support transfer of hydrolysate to tanker trucks for shipment to a TSDF. For the disposal of hydrolysate off-site at a TSDF, approximately two tanker trucks would leave NECDF each day for a six month period.

Following caustic neutralization, the caustic hydrolysate may be transferred into a secondary treatment unit. Secondary treatment may be needed to meet the acceptance criteria of a receiving TSDF. This treatment unit, if used, would probably include an oxidative process (e.g., addition of hydrogen peroxide, oxone, SCWO, or perozone). The most likely treatment is with hydrogen peroxide. Secondary treatment with hydrogen peroxide would involve reaction of hydrolysate (52% by volume) with 70% nitric acid (13% by volume) and 30% hydrogen peroxide (35% by volume). This process would require the addition of about 330 gal of nitric acid and hydrogen peroxide to every 1,000 gal of hydrolysate and would increase the volume of "polished" hydrolysate (process waste) to approximately 1.3 million gal. The type of TSDF receiving the hydrolysate will dictate whether or not oxidation is needed and the degree of treatment required. Hydrolysate (with or without secondary treatment/oxidation) would be shipped to a TSDF for disposal.

Drained ton containers would be decontaminated by washing twice with a NaOH solution in the CHATS, then rinsed with water. The spent decontamination solution water would be reused as makeup for caustic solution in the VX neutralization process. Decontaminated ton containers would be monitored to confirm that they meet the Army's 3X level. Any ton containers not meeting the 3X level would be treated again. Decontaminated ton containers would be cut into halves. Ton container halves would be shipped to Rock Island Arsenal for 5X thermal treatment, smelting and recycling. Recycling the ton containers would yield approximately 2.7 million lb of carbon steel.

A decision by the Army to delay disposal of the hydrolysate in order to continue testing and evaluation of the SCWO process (as described in the no-action alternative), could require the construction of an on-site above-ground storage tank farm to store the hydrolysate until it can be treated further by SCWO. This option would add cost and delay completion of disposal. It is presented here as a backup approach, which is not preferred by the Army. At a minimum, the tank farm would have a storage capacity of 1 million gal for concentrated hydrolysate and would hold the hydrolysate until completion of testing and evaluation of the SCWO process. A decision to construct a storage tank farm would be determined by the results of ongoing process evaluations at NECD and the anticipated availability of SCWO for hydrolysate treatment. If a tank farm were constructed and SCWO became operational, effluent brine solution, which has been delisted as a hazardous waste, would be transported to an off-site facility.

Following storage, the hydrolysate would be processed in the SCWO. Separation of liquids and gases would then be performed. The gas would be mixed with SCWO building ventilation air in a plenum chamber and exhausted through a cascading carbon filter system prior to discharge to the atmosphere. The brine solution (SCWO effluent) would be staged in tanks until shipped to an off-site TSDF.

Approximately 8.5 million gal of SCWO effluent would be generated and shipped to an off-site disposal facility. The SCWO effluent has been delisted and would not be considered a hazardous waste (see Sect. 1.2, footnote 1). Consequently, the disposal facility need not be a facility licensed for treatment of hazardous wastes. Most semi-trailer tankers range in size between 4,000 and 6,000 gal capacity. Assuming the semi-trailer tankers with 4,000 gal capacity is typical of the trailers employed to transport brine, about 2,100 shipments would be needed to ship the 8.5 million gal of SCWO effluent to an off-site disposal facility. Approximately six tanker trucks would leave NECDF with SCWO effluent each day for approximately a year if this backup plan were implemented.

Following neutralization and operation of the SCWO, about 5,100 lb of activated carbon filters would also be disposed of at a TSDF. The carbon filters would be considered a State of Indiana listed hazardous waste for disposal purposes.

2.3 REFERENCES

SWEC (Stone and Webster Engineering Corporation)1997. *Evaluation of Confirmatory Testing of Supercritical Water Oxidation for Treating VX/NaOH Hydrolysate*, May 3, 1997.

U.S. Army 1998. *Pilot Testing of Neutralization/Supercritical Water Oxidation of Agent VX at Newport Chemical Depot, Indiana: Final Environmental Impact Statement*, Program Manager for Chemical Demilitarization, Aberdeen Proving Ground, Md., December.

[This page intentionally left blank]

3. EXISTING ENVIRONMENT AND POTENTIAL ENVIRONMENTAL CONSEQUENCES

This section identifies the scope of the EA, describes the environmental setting of the proposed project, and presents an analysis of potential environmental impacts that could result from the implementation of the alternatives.

3.1 SCOPE OF THE ENVIRONMENTAL ANALYSIS

This EA addresses the potential environmental impacts of two alternatives: no-action and the proposed action. In the ROD following completion of the NECD FEIS (U.S. Army 1998), the on-site neutralization/SCWO process was selected for pilot testing in destruction of the NECD stockpile of nerve agent. Subsequently, construction of the NECDF for neutralization/SCWO was initiated. However, the SCWO process has not developed as quickly as expected and during the delay the EC has been eliminated from the process (see Sect. 1.1). Thus, neutralization/SCWO, without the EC unit, and off-site shipment of the SCWO brines is considered the no-action alternative in this EA.

The proposed action is accelerated neutralization of the VX nerve agent stored at NECD. The process would include subsequent chemical and physical treatment of the hydrolysate that results from the neutralization process, and shipment of the treated hydrolysate to a RCRA-permitted TSDF for disposal.

Both truck and rail are transport options for off-site shipment of the SCWO brine or hydrolysate. The choice of transport mode would depend on the location and cost of the selected off-site TSDF. For either mode of transportation, a truck loading facility would be needed in order to remove the liquid effluent, either SCWO brine or hydrolysate, from the depot. If shipped by rail, the liquid effluent would be hauled by truck to a railhead approximately 30 miles from the depot. The analysis in this EA assumes that once the liquid effluent is loaded into a tanker and moved off the NECD, the carrier and TSDF operators would follow appropriate permit requirements and procedures to ensure environmentally safe handling, treatment, and disposal.

Based on findings of the FEIS (U.S. Army 1998), the NECDF site has already been prepared, utilities have been installed, and most of the impacts from construction have already

occurred. Furthermore, construction of an accelerated caustic neutralization facility at NECD has subsequently been addressed in a REC (Appendix A) and determined to involve less impacts than the facility described in the FEIS. Thus, this EA does not further address the construction impacts.

The TSDF eventually selected for disposal of the SCWO brine or hydrolysate resulting from neutralization of VX will have been previously permitted under federal, state, and local regulations to handle the form of the material that would be shipped from NECD and would be subject to monitoring and oversight by appropriate regulatory agencies. Therefore, impacts at the TSDF site are not expected and are not within the scope of this EA. Rather, the analyses conducted for the EA focus on the potential impacts associated with the processes that would occur on-site at NECD and during off-site transport of the hydrolysate.

In addition, environmental impacts of the decontamination and decommissioning of the NECDF after destruction of the chemical agent is complete will be addressed in a future closure plan (required by Indiana state laws) and are not considered here.

3.2 ENVIRONMENTAL SETTING

The NECDF is located in the NECD, which lies about 2.5 miles southwest of Newport, Indiana (Fig. 3.1). The depot covers about 7,100 acres of relatively flat land. Facilities and grounds at NECD occupy about 260 acres, with the remaining area consisting mainly of cropland, pasture, and forest. The future use of NECD is uncertain. A more detailed description of the environmental setting is provided in Sect. 3 of the FEIS (U.S. Army 1998), and additional discussion of affected environment is provided in the sections that follow.

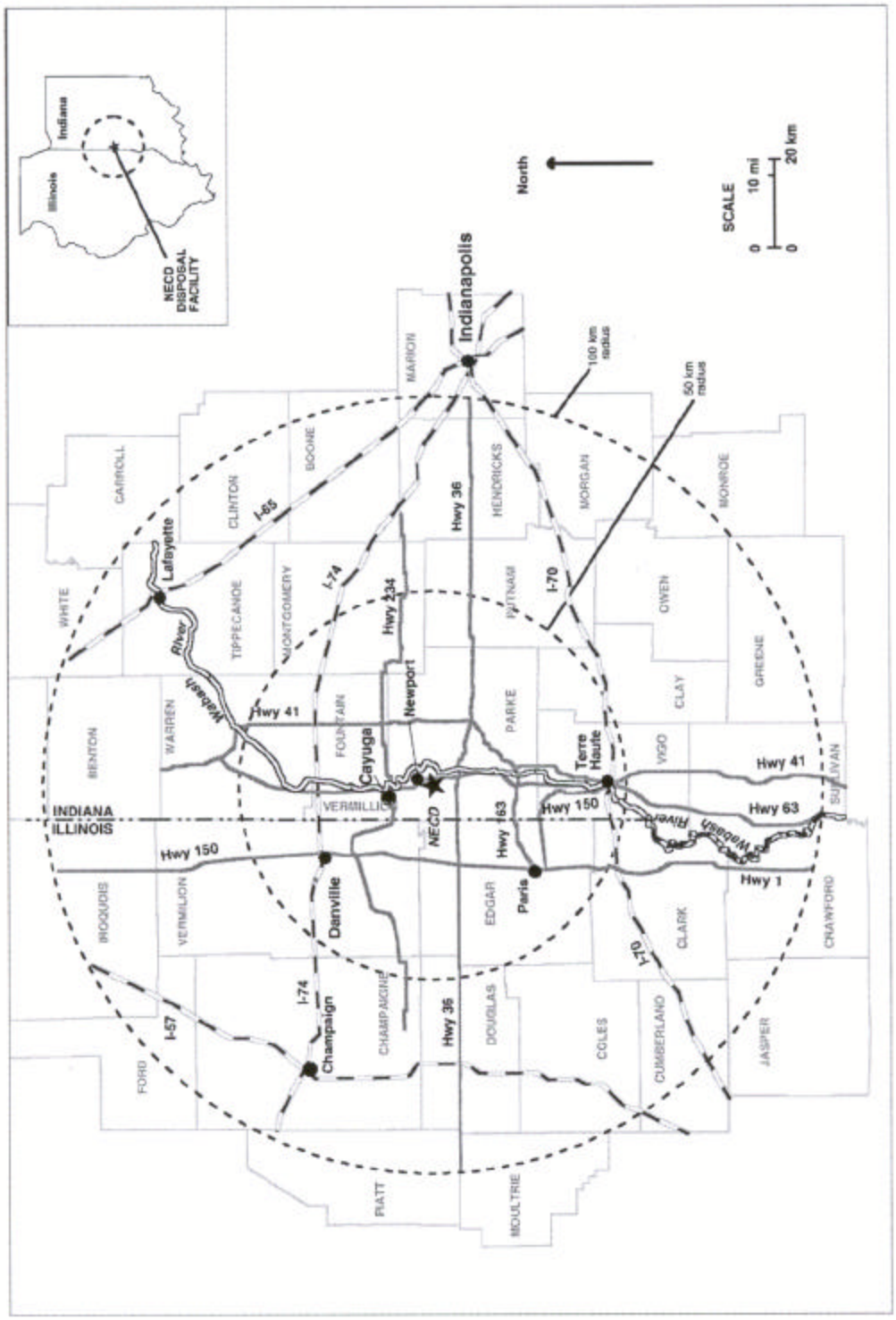

Figure 3.1 Regional map of the Newport Chemical Depot area.

3.3 ENVIRONMENTAL ANALYSIS

3.3.1 Air Quality

3.3.1.1 Affected environment

NECD lies within Vermillion County, Indiana, which is in attainment of all state and National Ambient Air Quality Standards (NAAQS). All areas within 30 miles of NECD are also in attainment of all state and federal air quality standards (IDEM 2002).

3.3.1.2 No-action alternative

The FEIS (U.S. Army 1998) analyzed the air quality impacts of operational emissions of SO_2, NO_2, CO, O_3, particulates, CS_2, and agent VX from the neutralization/SCWO process. Using conservative assumptions, the FEIS showed that ambient levels of these pollutants would be below applicable standards or guidelines. For the more toxic chemicals, CS_2 and agent VX, the ambient levels would be less than 10% of the relevant standard or guideline.

Under the no-action alternative, the EC would not be built and operated (Sects. 1.1 and 1.2). Consequently, any emissions of pollutants from facility operations would be expected to be no greater than those reported by the FEIS. However, because of the large quantities of SCWO effluent that would be shipped off-site, emissions from trucks would be larger than suggested by the FEIS. Because current ambient pollutant levels are safely below NAAQS, the increased truck traffic would not be expected to cause a violation of air quality standards.

3.3.1.3 Proposed action

The accelerated neutralization alternative would not lead to greater emissions of NAAQS criteria pollutants than the no-action alternative. Accelerated neutralization with secondary treatment of hydrolysate would require less energy and fewer waste shipments than the no-action alternative. Consequently, emissions of criteria pollutants would be smaller than under the no-action alternative. In the absence of the SCWO process, no CS_2 would be emitted. Even with SCWO, concentrations of CS_2 would not be expected to approach levels of concern (U.S. Army 1998).

The option of storing hydrolysate until the SCWO becomes operational would delay the generation of pollutants related to SCWO operation and shipment of SCWO effluent, but total emissions would be approximately the same. The hydrolysate storage option would lead to increased emissions of toxic air pollutants because of emissions from the storage tanks. Because gases purged from the storage tanks would be filtered to remove most organic compounds, the increase should be small. No estimate is currently available. To store hydrolysate safely, it must be blanketed by nitrogen to exclude oxygen. When tanks are being filled, the nitrogen blankets must be vented through a pollution control device. In addition, diurnal and weather-driven temperature changes would require addition of nitrogen and bleeding of the nitrogen blanket to keep internal pressures within safe bounds. Trace amounts of various organic compounds (e.g., diisopropylamine, ethanol, and diisopropylaminoethanethiol) are found in the tank vapor space. However, because activated carbon filters are highly effective at removing polar compounds, very little of the organic compounds would be released to the atmosphere. No estimates are available on the specific types and quantities of toxic organic compounds that would be released.

Options that do not employ SCWO would also eliminate emissions of toxic chemicals from the SCWO. As with virtually any chemical process involving organics, either neutralization process would entail very small emissions of hazardous chemicals. However, either process would take place in controlled environments where gases would be filtered before being discharged to the environment

Treatment of the hydrolysate for off-site shipment by hydrogen peroxide (H_2O_2) or other processes would produce little off-gas and no odor, but a detailed characterization of those emissions is not available. Any of these processes would be free of the pollutants common to combustion processes such as oxides of nitrogen, dioxins, furans, and particulates (Parsons 2001). The use of any treatment process at NECDF (other than SCWO which is currently permitted) may require modification of the facility's air permit. (NRC 1993; Parsons 2001)

3.3.2 Water Resources

3.3.2.1 Affected environment

The Wabash River flows in a north-to-south direction east of NECD and ultimately receives all runoff leaving the installation (Fig. 3.2). The southeasterly flowing Little Vermillion River drains the northern half of the installation, and empties into the Wabash River slightly east

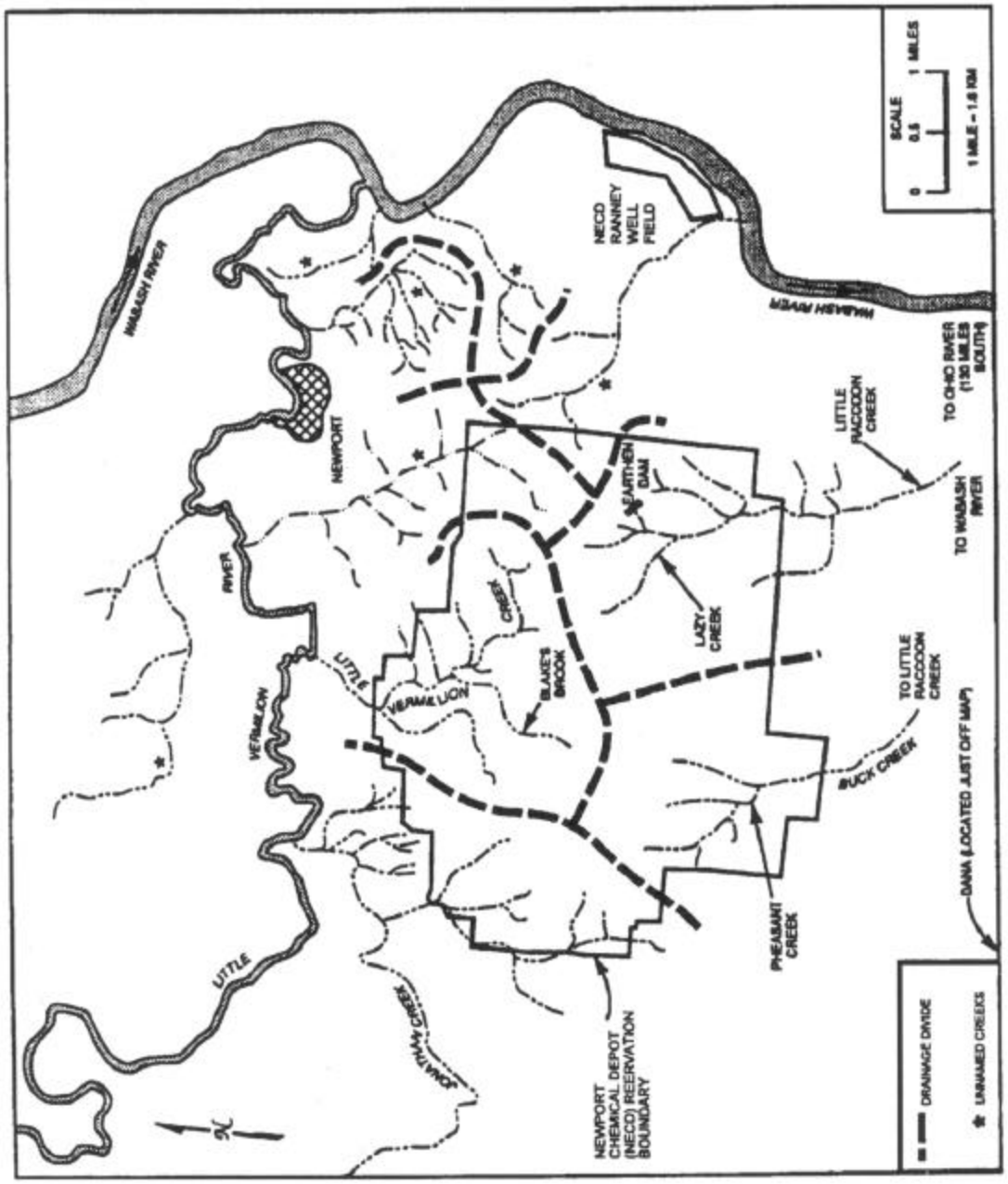

Figure 3.2 Surface water features and drainage at Newport Chemical Depot.

of Newport. The northwestern corner and north-central portions of NECD are drained by Jonathan and Little Vermillion creeks. The southeastern corner of NECD is drained by Little Raccoon Creek (Fig. 3.2). The confluence of Little Raccoon Creek with the Wabash River occurs approximately 7.5 miles south of Newport, Indiana.

The Wabash River serves as a hydrologic boundary between Vermillion County and Parke and Fountain counties to the east. Runoff from NECD would be carried southward. No surface waters that flow across the NECD reservation are used as industrial, sanitary, or drinking water.

Surface water withdrawals account for about 90% of the water consumption in Vermillion County. Groundwater accounts for 10% of Vermillion County water consumption, but 100% of the consumption of NECDF. Glaciofluvial deposits (5- to 24-ft depth) along the Wabash River are capable of sustaining groundwater yields sufficient for large industrial and municipal supplies, and groundwater is readily available from the glaciofluvial aquifer to meet the demand of the NECDF. NECD currently consumes approximately 10,000 gal/day. The recommended groundwater withdrawal rate from the glaciofluvial deposits along the Wabash River range from approximately 7.2 to 8.64 million gal/day, with one pump operating. Two pumps are available, and a third one serves as an installed spare (U.S. Army 1998). The available water supply at NECD is largely unused because production facilities are no longer active. Groundwater from the glaciofluvial aquifer is of very good quality. Although very hard, this potable water requires minimal treatment other than precautionary chlorination before use.

3.3.2.2 No-action alternative

The operation of the NECDF under the no-action alternative (SCWO processing without brine drying through the EC) would result in total water use of approximately 14,000,000 gal. This short-term increased demand for both process and potable water would be well within the supply capability of the existing NECD water system, from the Ranney well field.

Under no-action, the NECDF would generate approximately 12,000 gal/day of sanitary wastewater, which would be routed to the existing NECD sewage treatment plant. The sewage treatment plant has sufficient capacity to accommodate the NECDF discharge of sanitary wastewater and would not require expansion. The treatment plant has the capability to treat the sanitary waste produced by 2,000 people. The present on-site work force of about 300 would increase by about 400 people under the no-action alternative.

Little Raccoon Creek would receive runoff from the parking lots and roofs during precipitation events. Runoff from within the NECDF would be retained in a newly constructed detention basin formed by the small earthen dam across the uppermost tributary of Little Raccoon Creek. Chemical agent related materials are thereby prevented from reaching stormwater.

A new diversion channel has been constructed to convey runoff from other parts of the depot located to the north and west of the NECDF to a discharge point into Little Raccoon Creek. This diversion channel controls run-on to the NECDF site as required by RCRA for hazardous waste management facilities. The discharge point is immediately downstream from the new stormwater detention basin.

With the elimination of the EC, there would be no release of process effluent from the NECDF. Approximately 31,000 gal/day of brines from the SCWO process would be transported off-site to a commercial TSDF. Although the SCWO effluent has been delisted as a hazardous waste, a transport accident involving the release of the brine solution into a body of water could result in significant adverse environmental impacts. The carrier which takes responsibility for transporting the materials would be required to comply with all appropriate transport regulations.

3.3.2.3 Proposed action

The no-action alternative and accelerated neutralization with delayed SCWO treatment of hydrolysate would involve the greatest water use by far. Accelerated neutralization without SCWO would reduce the water usage from 14,000,000 gal to about 790,000 gal.

A truck loading (transfer) facility would be constructed within the current NECDF footprint in accordance with hazardous waste management requirements to prevent spills and leaks. Furthermore, because surface water flow is to the south, any runoff from the facility would be directed south toward the detention basin (Sect. 3.3.2.2).

No process liquid effluent would be released to the environment of NECD from either the no-action or proposed action alternatives; thus, no significant impacts to local water resources would be expected. The same spill and leak prevention measures would be incorporated for either the proposed action or no-action alternatives. Therefore, with significantly less water use, the overall impacts of accelerated neutralization on water resources would be positive, as compared with the no-action alternative.

A facility for treating the hydrolysate for shipment to a TSDF, if needed, would be constructed in an existing NECDF building. Therefore, there would be no increased potential for runoff or surface water contamination over the no-action alternative.

The hydrolysate or the liquid effluent from hydrolysate treatment would be shipped to a permitted TSDF. A transport accident involving the release of the hydrolysate into a body of water could result in significant impacts. The probability of an accident involving such a release would be low, and would be the same as for other hazardous materials routinely transported on U.S. highways and railways. Sections 3.3.6.2 and 3.3.6.3 provide estimated accident frequencies based on National Highway Transportation Safety Administration figures. The carrier which takes responsibility for transporting the materials would be required to comply with all appropriate hazardous materials transport regulations.

A possible backup scenario for accelerated neutralization could involve a decision to store hydrolysate for delayed treatment and disposal. If the decision is made to delay hydrolysate disposal while the SCWO technology continues to undergo testing for use at NECD, the need would arise for constructing an above-ground tank farm of sufficient volume to store the hydrolysate that would be produced by the neutralization of total NECD stockpile. To accommodate this scenario, up to 1 million gal of storage would be constructed for the hydrolysate (see Sect. 2.3). The tank farm would be constructed within the footprint of the current NECDF.

Storage of the hydrolysate in tanks for future treatment and/or disposal would provide more opportunity for accidental leaks or spills occurring because of the longer time frame required to complete the disposal. However, the tanks would be constructed in accordance with regulatory requirements for managing hazardous wastes, including secondary containment for containing runoff, leaks, and spills.

A highly improbable event involving catastrophic failure of a storage tank containing hydrolysate, although serious, would be essentially contained on-site by the required containment measures and response procedures. Additionally, toxicological screening has shown the toxicity of the caustic hydrolysate to be at least 1,800 times less than that of nerve agent (Appendix B). Therefore, the impacts to water resources that could be associated with a major release during storage of hydrolysate are greatly reduced from the hazards of an event involving the release of nerve agent. The stringent construction requirements for storage and close management of the facility by highly trained workers would make such an event extremely unlikely.

3.3.3 Land Use and Ecological Resources

3.3.3.1 Affected environment

Land use within the NECD, as described in Sect. 3.2 of the FEIS, is largely cropland, pasture, and forest. Facilities and grounds occupy only about 1% of the 7,100-acre depot. Land use in the five counties surrounding NECD is heavily agricultural.

The FEIS describes the ecological resources within a 100-mile radius of NECD as parklands, conservation areas, preserves (including Nature Conservancy areas), wildlife refuges and management areas, and wetlands. These areas often include large acreages of natural ecosystems or habitats and species of special interest or concern.

3.3.3.2 No-action alternative

Based on the findings of the FEIS, the NECDF site has already been prepared and construction is under way. No significant impacts to land or ecological resources would be expected from construction of the NECDF. Similarly, during routine operation, no changes in on-site or off-site land use, other than the land occupied by the NECDF itself, would be expected.

For routine operations, the FEIS concluded that the only potential for impacts to ecological resources would be via the aquatic pathway from the release of distillate from the brine drying process through the sanitary waste treatment system and into the Wabash River. However, with elimination of the EC and the brine drying process, the only process liquid that would have been released to the environment has also been eliminated.

3.3.3.3 Proposed action

New facilities required for accelerated neutralization would involve modifying existing on-site buildings to house the equipment necessary to implement the accelerated neutralization process. With construction of the accelerated NECDF, significant portions of the no-action, neutralization/SCWO, design would not be required and would not be constructed. The overall land impacts of the accelerated neutralization facility would be reduced as compared to the impacts of the neutralization/SCWO facility.

In the event that a decision is made to delay disposal of hydrolysate in order to allow the SCWO process to undergo further testing, a tank farm would be constructed for storing the

hydrolysate. Under routine operations, there would be no release of process liquid effluents to the environment.

The only additional potential for land or ecological impacts would be through spills or leaks of hydrolysate during the extended period of storage. See Sect. 3.3.2.3 for additional discussion.

3.3.4 Threatened and Endangered Species

3.3.4.1 Affected environment

The FEIS provides detailed information concerning federally and state-listed threatened and endangered species that potentially occur within 62 miles of NECD. The federally listed Indiana bat is known to occur on NECD. Two maternity colonies were found northeast and northwest of the NECDF. Based on two reliable site records, the Indiana-listed endangered badger is also known to occur at NECD. Five Indiana-listed endangered bird species—the upland sandpiper, osprey, sandhill crane, sedge wren, and Henslow's sparrow—have also been recorded at NECD (U.S. Army 1998).

3.3.4.2 No-action alternative

As discussed in the FEIS, close canopy riparian woodland comprising suitable Indiana bat foraging habitat extends up the headwaters of Little Raccoon Creek into the southern section of the NECDF area. Approximately 6.6 acres of this habitat has been cleared for the stormwater detention basin. A mitigation plan for the cleared 6.6 acres was developed by the depot and approved by the Indiana Department of Natural Resources (IDNR). Part of the mitigation plan required tree planting along an existing stream more than 1 mile west of the NECDF and publication of an annual report on survival rates of the trees.

The closest known capture location of an Indiana bat is about 0.3 mile to the south of the cleared area. The closest roost site for the Indiana bat is 0.9 mile from the NECDF site.

Bald eagles use and are often sighted along stretches of the Wabash River immediately east of the NECD. The IDNR reported one instance of nest building across the river from NECD in 1992. However, the nest was not used.

A *Biological Assessment for Threatened and Endangered Species Near the Proposed Site for Pilot Testing Neutralization/Super Critical Oxidation of VX Agent at Newport Chemical*

Depot, Indiana was prepared and submitted to the U.S. Fish and Wildlife Service in 1998 (U.S. Army 1998, Appendix D). The assessment concluded that effects to bald eagles or Indiana bats from construction or operation of the NECDF are unlikely. Bald eagles, if present, are too distant to be affected by construction, and any effluent constituents would be of low toxicity and low potential for bioaccumulation. Furthermore, the only process liquid effluent released, distillate from the EC, has now been eliminated from the process.

According to the 1998 biological assessment, the effects of any loss of potential Indiana bat foraging habitat would be minimal because of the small acreage involved and the availability of other existing habitat and maturing new foraging habitat. Furthermore, the agreement reached between the Army and the IDNR that the riparian corridor impacted by construction of the NECDF would be replaced should also result in enhanced habitat for the Indiana bat.

3.3.4.3 Proposed action

Because there would be no disturbance of additional Indiana bat habitat over the area already cleared for the no-action alternative, potential impacts of the proposed action would be similar.

Generally, the impacts of constructing and using a tank farm for temporary storage of the hydrolysate would be similar to those already discussed. The longer time period involved with storage of the hydrolysate would provide increased possibility of spill or leaks. However, the tank farm would be constructed according to standards for hazardous materials. Additionally, the facility would be managed by personnel trained to detect and respond to any accidental releases. If a spill or leak occurred, containment measures and response procedures enacted would retain the released hydrolysate on-site. Even under the highly remote possibility of a catastrophic failure of one of the storage tanks, measures and procedures would be in place to maintain the release on-site. Any small amounts of hydrolysate that might enter Little Raccoon Creek under this improbable scenario would be quickly diluted to non-toxic levels and would be even further diluted by the flow of the Wabash River (U.S. Army 1998).

3.3.5 Waste Disposal

3.3.5.1 Affected environment

Only nonhazardous wastes would be disposed of in the local area. The FEIS reported that three of the five counties in the socioeconomic impact area—Fountain and Parke counties in Indiana and Edgar County in Illinois—have no operating landfill at this time and truck their refuse to other jurisdictions (B. Moffett, Fountain County Emergency Management Department, personal communication to M. Schweitzer, Oak Ridge National Laboratory (ORNL), Sept. 22, 1997; S. Milliken, Parke County Planning and Zoning Department, personal communication to M. Schweitzer, ORNL, Sept. 22, 1997; W. Brown, Edgar Co. Emergency Services and Disaster Agency, personal communication to M. Schweitzer, ORNL, Sept. 23, 1997). Vermillion County, Indiana, has two contiguous non-hazardous landfills; one is a sanitary landfill and the other is a construction demolition landfill. Both are privately owned for public use (J. Kanizer, Land Fills, Inc., personal communication to M. Schweitzer, ORNL, Sept. 25, 1997). In Vermilion County, Illinois, there also are two active landfills, which have substantial capacity at this time. These landfills handle locally generated waste as well as refuse from Champaign and Edgar counties in Illinois and several Indiana counties (K. Riggle, Vermilion Co., Illinois Health Department, personal communication to M. Schweitzer, ORNL, Sept. 22, 1997). Because of the availability of landfills for non-hazardous wastes, generation of non-hazardous wastes is not considered an impact of importance.

3.3.5.2 No-action alternative

The FEIS reports that secondary wastes [including demilitarization protective ensembles (DPE), metal scrap, and spent carbon filters] would be generated during facility operations. FEIS Table 2.7 (U.S. Army 1998) lists the estimated quantities of waste that would be generated by the proposed disposal operations at the NECDF. Because the EC would not be built and operated (Sect. 1.1), solid wastes generated would be much smaller under the no-action alternative than was estimated in FEIS Table 2.7. For the no-action alternative, most of the hazardous solid waste would consist of approximately 5,100 lb of spent activated carbon filter elements.[1] DPE suits would be decontaminated then packed in 55-gal drums for off-site disposal. No estimates of the

[1]FEIS Table 2.7 reports generation of 2.0 lb of activated carbon per 1000 lb of VX processed. For processing 2,530,000 lb (1,265 tons) of agent VX, 5,060 lb of activated carbon would be generated.

quantity of DPE suits were presented in the FEIS. In addition, approximately 2.7 million lb of scrap metal would be shipped to the Rock Island Arsenal for smelting.[2] Most of this would consist of TCs, which after being drained and decontaminated, would be cut into halves. Ton container parts would be monitored to assure 3X levels and shipped to the Army Arsenal at Rock Island, Illinois, where they would be smelted for reuse.

The liquid wastes produced by SCWO (SCWO effluents) would be shipped to a permitted off-site TSDF. The specific TSDF has not been selected. Approximately 15 million gal of SCWO effluents would be generated under the no-action alternative.

3.3.5.3 Proposed action

Solid Waste. The accelerated option of destroying agent VX by caustic neutralization and storing hydrolysate until the SCWO becomes operational would generate more spent carbon filters than the no-action alternative. Current estimates have two 1-ft^3 filters for each of the six tanks. If the filters last the life of the tank system, 12 ft^3 (about 1,200 lb, assuming 100 lb/ft^3) of spent filter wastes would be generated by hydrolysate storage in addition to the 5,100 lb generated by the neutralization and SCWO processes. Because the hydrolysate storage option involves additional handling and management of hazardous chemicals, the amount of waste generated would be greater than for the no-action alternative.

The options that do not include SCWO or hydrolysate storage would result in some reduction of spent carbon filters because the SCWO process would not be operated. However the reduction may be more than compensated for by the additional carbon and DPE wastes generated by the additional handling involved in these accelerated options.

Spent filters, DPE and other personal protective equipment (PPE) would be generated by use of the CHATS for draining and decontaminating the ton containers. Neutralization would involve additional operations by suited personnel in facilities for which gases would be filtered. Finally, if hydrolysate treatment by hydrogen peroxide or other chemicals is performed, these processes would require personnel to wear protective clothing and would require air filtration to capture volatile organic chemicals. Each of these systems involves hands-on operations by suited personnel.

Current estimates place the quantities of solid wastes as follows: activated carbon filters between 170 and 180 thousand pounds for the campaign, PPE at about 60,000 pounds, process

[2] FEIS Table 2.7 reports generation of 935 lb of scrap metal from each 1,000 lb of VX processed. Processing 2,530,000 lb of agent VX would generate an estimated 2,365,550 lb of scrap metal.

trash at about 60,000 pounds, about 30,000 pounds of valves and plugs removed from TCs, and maintenance wastes at about 20,000 pounds. This material would be disposed of at a commercial TSDF by incineration, landfilled, or decontaminated and recycled. As under the no-action alternative, about 2.7 million pounds of metal parts would be decontaminated and shipped to the Rock Island Arsenal for smelting.

Liquid waste. The quantities of liquid wastes also depend on the specific option selected by the Army. However, the accelerated option would result in generation of significantly less volume of liquid wastes than the no-action alternative. On the other hand, SCWO effluents would be much less toxic than the hydrolysate (treated or not) that would be the principal liquid waste of the proposed action.

Accelerated caustic neutralization would generate approximately 900,000 gal of liquid waste that would need to be transferred to a TSDF. Essentially all ton container decontamination solutions would be incorporated into the caustic hydrolysate. Tanker trucks used for transporting the hydrolysate would be decontaminated using normal hazardous waste decontamination procedures upon completion of hydrolysate transport operations.

Treatment of caustic hydrolysate to make it more suitable for disposal would further increase the quantities of liquid waste, but make the resulting liquid waste less hazardous. For example, the current plan for hydrogen peroxide treatment is to add 1 gal of a nitric acid–hydrogen peroxide solution to each 3 gal of hydrolysate. This would lead to shipment of approximately 1.3 million gal of liquid waste.

3.3.6 Transportation

3.3.6.1 Affected environment

Access to NECD is provided by State Route (SR) 63, a north-south, four-lane divided highway (speed limit, 55 mph). The highway connects NECD to Interstate 74, approximately 18 miles to the north, and to Interstate 70, approximately 29 miles to the south. State Route 63 has two 12-ft-wide lanes in each direction, 10-ft-wide outside paved shoulders, and 4-ft-wide inside paved shoulders. Since publication of the FEIS, there have been no changes in the design of this segment of SR 63 or in the highway's intersection with the local road providing access to NECD (B. Conrad, Crawfordsville District Office, Indiana Department of Transportation, personal communication to B. Shumpert, ORNL, Nov. 26, 2001).

Traffic counts performed by the Indiana Department of Transportation in 1993 and 1998 recorded 7,590 and 7,770 vehicles per day, respectively, using the segment of SR 63 in front of NECD (Indiana Department of Transportation 1993; T. Watson, Crawfordsville District Office, Indiana Department of Transportation, personal communication to B. Shumpert, ORNL, Nov. 26, 2001). Over this 5-year period, traffic volumes on this segment increased by 0.5% per year. Applying this rate of increase to the 1998 counts produces an estimated 2002 traffic volume of 7,926 vehicles per day on this segment of State Route 63. Using the highly conservative estimate that peak hourly traffic is 15% of the average daily count (C. Klika, Indiana Department of Transportation, personal communication to M. Schweitzer, ORNL, Sept. 25, 1997), the peak number of vehicles in 2002 would be 1,189 in 1 hour. Assuming these vehicles are approximately equally distributed among the four traffic lanes, about 300 vehicles would use each lane during peak traffic periods.

According to the Transportation Research Board's *Highway Capacity Manual* (1994), a multi-lane rural highway like SR 63 can accommodate up to 660 passenger cars per hour per lane with traffic moving at 55 mph and still maintain a Level of Service (LOS) of A. This LOS is the best possible rating and means that traffic flows freely with no disruptions or impediments to maneuverability. Even if the current usage of this segment of SR 63 doubled, the highway would retain its LOS rating of A.

3.3.6.2 No-action alternative

The FEIS used an estimated construction work force of 400 workers and concluded that even "if there is no car pooling by construction workers and 400 additional vehicles use SR 63 at morning and evening shift change times, an LOS of A would still be maintained even if all 400 vehicles travel in a single direction." However, the FEIS reports that "at the end of the work day, it is likely that construction workers would experience some delay in getting back onto SR 63, especially if all 400 workers end their shift at the same time. In addition to creating delays for construction workers, the daily merging of 400 vehicles onto SR 63 during a compressed time period would increase the risk of accidents at this intersection, which represents a small to moderate impact to the local transportation network." Construction and operations of the EC would require a minimal workforce—2 to 5 persons. Consequently, during construction, the transportation impacts of the no-action alternative would be no larger than those described in the FEIS. The operational workforce would be no larger than the peak construction workforce so the impacts would be similar or smaller.

The FEIS (Sect. 2.2.3.4) reports that up to 6 truckloads of solid waste may be shipped off-site each day. Between 5 and 7 truckloads per day of SCWO effluent would be shipped off-site during pilot testing. This number of shipments would not be expected to adversely affect transportation on SR 63. SCWO effluent is primarily water with sodium sulfate and sodium phosphate. In the unlikely event of an accidental spill, solids and effects of salts could impact freshwater bodies, and might cause fish kills.

The shipment of the SCWO effluent would increase the risk of traffic accidents between NECDF and the chosen TSDF. Based on National Highway Transportation Administration statistics, Table 3.1 and Table 3.2 show the estimated number of injuries, fatalities, and accidents that might be expected during transportation. Because the TSDF has not been selected and the mode of transportation not determined, the estimates were calculated for hypothetical TSDFs that are 300 and 1,000 miles away. Risks are proportional to distance traveled in that mode, so risks at other distances can be estimated. For rail transport, the risks of truck transport for an additional 30 miles to a railhead at each end of the trip were added to those from the rail segment. In order to make conservative risk estimates, trucks were assumed to hold 4,000 gal and rail tanker cars would carry 20,000 gal. Both 4,000-gal trucks and 20,000-gal railcars are small, maximizing the number of shipments; in reality, there would probably be fewer shipments with greater volume per shipment, reducing the total mileage. The risk of train shipment may also be overstated, as estimates were based on train miles, not railroad car miles.

Conservatively, about 17 accidents involving truck shipments might be expected from the no-action alternative, with the expectation of a couple of injuries; however, no fatalities would be expected. The risks from rail shipment would be even smaller (Table 3.2).

3.3.6.3 Proposed action

Traffic impacts of the proposed action would be similar to or smaller than those for the no-action alternative. For the accelerated destruction option of storing hydrolysate, the peak construction work force would be no larger than described in the FEIS. With the option of construction of hydrolysate storage tanks, and postponement of SCWO construction, the construction period would be extended and the peak work force would probably be smaller than the no-action alternative peak work force. For the other accelerated options, the construction work forces would be smaller because fewer and smaller facilities would be built. The no-action alternative provides a good upper bound estimate of the traffic impacts of the proposed action.

Table 3.1 Expected fatalities, injuries, and accidents involving trucks carrying SCWO brine, VX hydrolysate, or treated hydrolysate from NECDF to off-site treatment, storage, and/or disposal facility

Material transported	Volume[a] (gal)	No. of 4,000-gal truck trips[b]	Expected fatalities by one-way distance[c] (mi) to TSDF[d,e]		Expected injuries by one-way distance[c] (mi) to TSDF[d,e]		Expected vehicle crashes by one-way distance[c] (mi) to TSDF[d,e]	
			300	1,000	300	1,000	300	1,000
SCWO brine	15×10^6	3,800	0.06	0.21	1.57	5.24	5.11	17.02
Accelerated SCWO brine	8.5×10^6	2,125	0.03	0.11	0.89	2.93	2.86	9.52
Hydrolysate	0.9×10^6	225	<0.01	0.01	0.09	0.31	0.30	1.01
Treated hydrolysate	1.3×10^6	325	0.01	0.02	0.13	0.45	0.44	1.46

[a]Volumes are approximations based on engineering estimates. Volume from processing 1,690 ton containers of VX. Treated hydrolysate volume is estimated at 1.3 × untreated hydrolysate volume.

[b]Number of trucks conservatively estimated based on 4,000-gal tanker trucks. Larger tanker trucks would require fewer trips and reduce the risk of traffic accidents.

[c]Because the distance to the TSDF is not known, estimations were made for 300 miles and 1,000 miles to provide a range of estimates.

[d]Expected fatalities, injuries, and accidents taken from average of fatality, injury, and accident rates for large trucks for 1997–2000 (2.7×10^{18} fatalities/vehicle-mile, 6.9×10^{17} injuries/vehicle-mile, 2.24×10^{16} accidents/vehicle-mile), as calculated from data in *Traffic Safety Facts 2000: A Compilation of Motor Vehicle Crash Data from the Fatality Analysis Reporting System and the General Estimates System—Large Trucks*, National Highway Transportation Safety Administration, U.S. Department of Transportation, Washington, D.C., 2001, Tables 3, 9, and 11, URL: http://www-nrd.nhtsa.dot.gov/pdf/nrd-30/NCSA/TSFAnn/TSF2000.pdf (accessed Jan. 31, 2002).

[e]Expected fatalities, injuries, and accidents based on vehicle-miles (number of truck trips × round-trip mileage to TSDF at this one-way distance). Use of larger tanker trucks would reduce the number of trips and the risks from traffic accidents.

Table 3.2 Expected fatalities, injuries, and accidents involving rail transportation of SCWO brine, VX hydrolysate, or treated hydrolysate from NECDF to off-site treatment, storage, and/or disposal facility

Material transported	Volume[a] (gal)	No. of Vehicle trips[b]		Expected fatalities by one-way distance[c] (mi) to TSDF[d,e]		Expected injuries by one-way distance[c] (mi) to TSDF[d,e]		Expected vehicle crashes by one-way distance[c] (mi) to TSDF[d,e]	
		Trucks	RR cars	300	1,000	300	1,000	300	1,000
SCWO brine	15×10^6	3,800	750	0.01	0.01	0.33	0.36	1.19	1.59
Accelerated SCWO brine	8.5×10^6	2,125	375	0.01	0.01	0.19	0.05	0.66	0.86
Hydrolysate	0.9×10^6	225	40	<0.01	<0.01	0.02	0.02	0.07	0.09
Treated hydrolysate	1.3×10^6	325	75	<0.01	<0.01	0.03	0.03	0.11	0.15

[a]Volumes are approximations based on engineering estimates. Volume from processing 1,690 ton containers of VX. Treated hydrolysate volume estimated at 1.3 times untreated hydrolysate volume.

[b]Number of trucks and railroad cars conservatively estimated based on 4,000-gal tanker trucks and 20,000-gal tanker cars. Larger tanker trucks and tanker cars would reduce the risks of traffic accidents.

[c]Because the distance to the TSDF is not known, estimations were made for 300 miles and 1,000 miles to provide a range of estimates.

[d]Expected fatalities, injuries, and accidents taken from average of fatality, injury, and accident rates for large trucks for 1997-2000 (2.7×10^{18} fatalities/vehicle-mile, 6.9×10^{17} injuries/vehicle-mile, 2.24×10^{16} accidents/vehicle-mile), as calculated from data in *Traffic Safety Facts 2000: A Compilation of Motor Vehicle Crash Data from the Fatality Analysis Reporting System and the General Estimates System—Large Trucks*, National Highway Transportation Safety Administration, U.S. Department of Transportation, Washington, D.C., 2001, Tables 3, 9, and 11, URL: http://www-nrd.nhtsa.dot.gov/pdf/nrd-30/NCSA/TSFAnn/TSF2000.pdf (accessed Jan. 31, 2002). Risk factors for rail portion are the average of calculated fatality, injury, and accident rates for train accidents for 1997–2000 (1.4×10^{18} fatalities/train-mile, 2.6×10^{17} injuries/train-mile, 3.8×10^{16} accidents/train-mile) taken from accident/incident data from train miles from Office of Safety Analysis, Federal Railroad Administration, Washington, DC, June 4, 2001, "Total Operational Data, Jan-Dec (Final)," URL: http://safetydata.fra.dot.gov/Prelim/2000/r02.htm (accessed Jan. 31, 2002) and "Total Accidents/Incidents," URL: http://safetydata.fra.dot.gov/Prelim/2000/r01.htm (accessed Jan. 31, 2002). Note that these rates were for train-miles, not car-miles. The typical train consists of about 100 cars. To account for this practice while providing conservative estimates, train-miles are converted to car-miles by assuming that ten cars are shipped per train.

[e]Expected fatalities, injuries, and accidents based on number of railcars × round-trip mileage to TSDF at this one-way distance plus a 60-mi trip (30 mi one way) by tanker truck at each end of the rail trip. Expected fatalities, injuries, and accidents are the sum of the estimates for the truck and train portions of the trip.

Because of the larger quantity of SCWO effluent that would be shipped under the delayed option, a few vehicle accidents might be expected with either truck or rail transport. For the hydrolysate (treated or untreated) shipment options, fewer shipments would be required and the risk of injuries, or damage from a traffic accident would be appreciably smaller than for the no-action alternative (see Tables 3.1 and 3.2). No fatalities would be expected for any option. For shipment by truck, two accidents and one injury would be expected. Comparing Tables 3.1 and 3.2 shows that shipping hydrolysate by rail would have smaller transportation risk than the already small risk of truck transportation. Because of caustic and toxic properties of hydrolysate, an accidental spill during transportation could cause disruption and possibly require an evacuation

3.3.7 Socioeconomics

3.3.7.1 Affected environment

The socioeconomic resources of the area around NECD, including parts of five counties in two states [Vermillion (in which NECD is located), Parke, and Fountain counties in Indiana and Edgar and Vermilion counties in Illinois] are described in the FEIS (U.S. Army 1998). This area is predominantly rural in character with scattered small communities. The exception is Vermilion County, Illinois, which is much more urbanized than the remainder of the study area. Data from the 2000 Census and other recent sources indicate that no significant changes have occurred in the socioeconomic character of the area since publication of the FEIS.

Changes from the 1996 county population figures reported in the FEIS range from a population gain of 5.5% in Parke County, Indiana, to a decline of 2.0% in Edgar County, Illinois. Population changes in communities in the vicinity of NECD ranged from a gain of 3.6% in Rockville to a loss of 10.1% in Newport compared to the 1994 population counts reported in the FEIS (U.S. Bureau of the Census 2001).

Similarly, the county labor forces have changed little in size compared to the figures reported in the FEIS. Unemployment, on the other hand, has declined in all counties in the study area, with the unemployment rate for the entire area falling to approximately 5.4% in 1999/2000. This rate is still considerably higher than the 3.0% and 4.4% rates recorded for the states of Indiana and Illinois, respectively (Illinois Department of Employment Security 2001; Indiana Department of Workforce Development, undated).

Housing data for the study area indicates some minor changes since publication of the FEIS. While the number of occupied housing units has increased by only 0.4%, the number of

vacant units for sale has increased by 41.0%, and the number of vacant units for rent has increased by 6.9% (U.S. Bureau of the Census 2001). The number of units for sale increased in all counties, and the number of units for rent increased in all except Parke and Vermillion counties in Indiana. Throughout the study area in 2000, there were 1,021 units for sale and 1,603 units for rent, a marked increase over the 721 sale units and 1,499 rental units reported in the FEIS.

The FEIS concluded that there would be no significant impacts from the increase in workers needed for construction and operation of the facilities. Much of the NECDF construction, especially the part involving environmental disturbance, has already been completed, and the utility infrastructure is already in place. The eventual destruction of the agent and decommissioning of facilities would reduce the number of long-term jobs available at NECD.

Until destruction of the NECD stockpile is completed, there is a very small possibility of an accidental atmospheric release of stored agent VX. Under worst-case meteorological conditions, such an incident could produce contamination that would have a severe negative economic impact. The risk of such a release of stored agent VX would decrease as demilitarization progresses.

3.3.7.2 No-action alternative

In the FEIS, impacts to socioeconomic resources associated with construction and operation of the neutralization/SCWO facility (the NECDF) were expected to be minimal and of short duration. This expectation was based on the availability of existing infrastructure (e.g., housing, schools, utilities, and solid waste landfills) and original staffing plans of 400 construction workers (at peak) and 400 operations workers (FEIS, Sects. 4.1.1.6 and 4.1.2.6).

The no-action alternative—neutralization/SCWO without the EC unit and off-site shipment of the SCWO brines—would be expected to result in somewhat smaller impacts to socioeconomic resources. The elimination of the EC (brine processing step) reduces estimated labor costs by approximately $1,000K for systemization and $1,500K for operation (Parsons 2000, Table 1). Some additional staff (probably no more than 3 to 5 personnel) would be needed, however, to load brines from the SCWO into tanker trucks for off-site shipment. Additional jobs would be created for truck shipment or rail shipment of the SCWO brines, but these jobs may not be filled in the immediate area.

Current NECDF staffing plans indicate two peaks in the construction force of approximately 275 full-time equivalents (FTE) (i.e., less than the original estimate of 400). The

current estimate of additional operational workers needed during systemization would be less than 500 FTE (i.e., slightly greater than the original estimate of 400). Peak employment (construction, contractor, and government) would be around 850 and would decrease as pilot testing of the neutralization process gets underway (S. Rowden, Parsons Corporation, personal communication to G. P. Zimmerman, ORNL, Dec. 10, 2001).

3.3.7.3 Proposed action

The proposed action is accelerated neutralization of the VX nerve agent stored at NECD followed by chemical and physical treatment of the hydrolysate (if needed for TSDF acceptance) and shipment of the treated hydrolysate to a licensed TSDF for disposal. Construction and operations work forces for the proposed action are expected to be similar in size to those for the no-action alternative.

Shipping VX hydrolysate off-site for disposal would eliminate the construction and operations staff needed for the secondary treatment part of the operation, thus eliminating the second peak in the construction force and reducing the maximum total. Some personnel, however, would be needed to handle the loading of the hydrolysate on the trucks. Additional jobs would be created for truck shipment (see Sect. 3.3.6.3) or rail shipment, but these people might not come from the immediate area.

If required by the off-site TSDF, the hydrolysate would be treated before it is shipped. Some construction and operational personnel would be required to construct and operate the secondary treatment facility. However, the man-months required to handle and load the larger volume are still less than those required for the no-action alternative. Additional drivers would be needed for the approximately 325 truckloads of treated hydrolysate or to handle additional tanker cars, although they may not result in jobs for people from the immediate area.

Treatment of the hydrolysate would require additional water, electricity, and resources to dilute the hydrolysate and power the secondary treatment process. However, these resource demands are expected to be less than those needed for the no-action alternative, which includes treatment of the hydrolysate in the SCWO unit.

Some of the money spent on transportation would go into the area's economy, but it is not possible to estimate that impact until the mode is chosen and transportation contractors are selected. The TSDF chosen to treat and dispose of the hydrolysate would benefit from the additional business, but again, because the location has not been determined, the economic benefits cannot be geographically defined.

The option of storing hydrolysate until the SCWO becomes operational (see Sect. 2.2) would increase costs, and delay completion of the disposal process. The total impacts would be of longer duration. The impact of this option would depend on the final disposition of the stored material. The benefit to the community from NECDF would extend over a longer period of time. If the employment is distributed over more years, there should be less disruption to the community than the minimal impact from the no-action alternative. The minimal utility needs required for storage would be extended over a longer time period. Storing hydrolysate from the destruction of the total stockpile would require a 1 million gal above-ground storage tank farm. Storage of neutralized hydrolysate would allow extended time to develop the SCWO process or find appropriate TSDFs for disposal. Use of a tank farm would extend the period of operation of the NECDF. With the exception of personnel required for constructing and maintaining the tank farm, the resources and personnel would be similar to the no-action alternative. The peak employment could be less, because the operations would take place over an extended time.

The FEIS found that the influx of additional workers would have minimal socioeconomic effects. Since the proposed action would require fewer workers at the facility, there would be even less impact.

3.3.8 Human Health and Safety

3.3.8.1 Affected environment

The inventory of agent VX at NECD is stored in steel ton containers in a building within the NECD installation border. Although there are small risks to workers associated with maintaining the stockpile (U.S. Army 1998), personnel involved in these activities are trained and equipped to minimize any exposure to the agent. The TCs will be moved into more hardened storage facilities called igloos. However, during the time that the inventory remains in storage, there is a very small possibility that a catastrophic accident could allow accidental dispersal of agent VX downwind, potentially causing fatalities in the general population.

3.3.8.2 No-action alternative

Workers. Construction of the NECDF neutralization and SCWO facilities would pose some risk to workers because of construction activity, but such risk would be typical of other

construction projects of similar size. Additionally, as noted before, much of the construction phase was addressed in the FEIS and has already taken place (U.S. Army 1998).

The processing of the VX would be highly automated and would be controlled to prevent toxic exposures to the workers. The limited period of operation would make any chronic effects of exposure unlikely.

The FEIS (U.S. Army 1998) focused on the risks from exposures to VX, as opposed to exposure to the caustic hydrolysate. It concluded that spills of hydrolysate would be limited to 1,000 gal, the maximum in one batch, and would be contained on-site. The FEIS concluded that such spills could be adequately handled. Storage capability was included in the system (about 11,000 gal), in case the neutralization process and the SCWO process were not perfectly synchronized.

Under no-action, a large number of shipments (about 16 per day) of SCWO effluent (brine solution) would be transported to the selected off-site TSDF. The effluent itself, however, is not considered hazardous to humans. Minimal impacts to workers would be expected from spills of effluent.

The FEIS concluded that an aircraft crash into the demilitarization building might result in the release of the VX from the agent holding tanks or from two ton containers. Such a low-probability external event could result in exposure of workers to VX.

Public. Much of the construction of the facility has already taken place and was considered in the FEIS. The remaining on-site construction would have minimal public health impacts.

Small exposures to VX during processing would be limited to workers and on-site personnel. A conservative public health estimate found an insignificant risk (U.S. Army 1998) to human health from normal operations. Elimination of the EC and shipment of the SCWO effluent to an off-site disposal facility would eliminate any discharge to the water treatment plant and the Wabash River.

The limited amounts of material in on-site storage in conjunction with the no-action alternative would present little off-site risk. Berms, pumps, drains, and trained response teams should contain spills on-site.

As mentioned above, there would be a number of shipments required to move the SCWO effluent to the selected TSDF, thus increasing the traffic off-site (see Sect. 3.3.6). The risk of an accident during transport resulting in a spill of the waste brine solution would be very low. Furthermore, any off-site spills of material in transport would not present a significant hazard to humans unless ingested.

An aircraft crash into the neutralization facility might result in the release of the VX in the agent holding tanks or in two ton containers. If this accident were to involve fire, a toxic plume of VX could travel off-site, contaminating land and water downwind of the site. Such a low-probability event could produce off-site fatalities. The risk of public exposure from release of stored agent will decrease as the stockpile is destroyed, but some risk will remain until the destruction of the agent is complete.

3.3.8.3 Proposed action

The proposed action discussed in this assessment would result in more timely destruction of the VX. However, it may pose some additional hazards related to handling, processing, or shipping neutralization products

Workers. Some additional construction would be needed if a tank farm were built for storage of hydrolysate during continued testing and evaluation of the SCWO process. For the accelerated neutralization processes, some of the existing construction would be modified. There would be some additional construction to prepare the utility building (UB) to contain the CHATS and to construct or modify support structures.

The accelerated neutralization process could present a slightly greater potential risk to the workers because of increased handling of the material. However, these increased risks will be managed through administrative procedures and thorough training of workers. The accelerated neutralization process would be less automated than the no-action, neutralization/SCWO process described in the FEIS. Ton containers would be brought to the UB for draining using the CHATS followed by agent neutralization in the stirred reactors (Sect. 2.2). The most likely leak of VX would involve one cylinder at a time, but it is possible that a common initiating event could involve more than one ton container in an incident.

The structures involved would be designed with primary and secondary containment, ventilation, and filter systems to prevent releases to the atmosphere. Used decontamination fluids that could not be reused in the process would be stored for off-site disposal. Workers would be trained and equipped to handle any spills of hydrolysate, which is estimated to be at least 1,800 times less toxic than VX (see Appendix B).

A backup (not preferred) accelerated neutralization option could involve construction of a tank farm large enough to contain the hydrolysate from destruction of the entire NECD VX inventory, and delay the disposal of the hydrolysate until the SCWO process becomes operational. Although some storage capability was originally planned in the system (about

11,000 gal), it was for temporary storage in case the neutralization process and the SCWO were not perfectly synchronized. Storage of hydrolysate from the entire inventory would require a 900,000 gal capacity. This volume could be stored in above-ground storage tanks until the SCWO is operating or a decision is made to ship the hydrolysate off-site for disposal.

The tank farm would be constructed with berms and structures to contain any leaks of the tank contents. Special storage precautions would be taken because the caustic hydrolysate has a pH of about 12–13, has an organic layer, and a low flash point (see Appendix B). Plans call for the tanks to be kept under a nitrogen atmosphere and to be constantly vented through carbon filters during the time that the hydrolysate is on-site. Leaks from the storage tanks would primarily affect the on-site workers. A total failure of a tank would be limited to the volume of one tank of hydrolysate. Such a spill would be contained by secondary containment. Response procedures should protect workers in most failures. A more difficult situation might be a rupture of a tank followed by a fire involving the hydrolysate. Firefighters would need to be protected against any toxic hazards as well as the fire.

The total volume of hydrolysate to be shipped to a TSDF would be significantly less than the volume of brine solution shipped under the proposed action, but the hydrolysate would be more hazardous. Appropriate spill containment and response procedures would limit the impacts of accidents during transfer of liquids to tankers or tankers to railcars. The quantities handled simultaneously would be limited by the capacity of the shipping container.

The Programmatic FEIS (U.S. Army 1988) considered the possibility of accidents at NECD initiated by external events, such as earthquakes, tornadoes, or airplane crashes. Although the probability of such an accident was determined to be very small, the consequences could be large, particularly with many ton containers of VX at the same location. If there were a release of the contents of several ton containers of VX, particularly in conjunction with a fire, there could be off-site impacts. External events could also initiate incidents during the processing, storage, or transportation of VX or hydrolysate.

The CHATS and Toxic Cubicle (for processing the VX) would be located in the existing UB, which is being retrofitted for agent processing. As part of this retrofit, the addition of ventilation with carbon filters, secondary containment, airlocks, and other necessary engineering features are being planned. The design and construction of this building would be evaluated for conformance to Army and general industry seismic standards. There would be two ton containers in each CHATS unit and five CHATS being simultaneously processed in the UB. Up to 24 TCs would be staged in UB awaiting processing. External initiating events have a very low probability; however, the release of VX would increase the impacts of such an event.

Public. The additional on-site construction required for the proposed action (see section on workers) would have minimal if any impacts on the public.

Most impacts of the proposed action would be confined to the site. Although it appears that there could be a greater chance of accidents during processing, because the material would be handled more frequently and greater operator intervention is required, most incidents would involve batch quantities of agent or hydrolysate. Response teams, trained and equipped for these events, could respond promptly and minimize the adverse impact of any release.

The option of storage of large quantities of caustic hydrolysate would increase the potential of a large spill. If there were a fire associated with the large spill, some toxic materials could be carried off-site in the smoke. More than 99.9999% of the VX would be destroyed prior to storage. Therefore, adverse impacts due to agent exposure would not be expected. Hydrolysate is about 1,800 times less toxic than VX. The nearest concentrations of population are 2-3 miles away. Thus, distance, coupled with the small probability of catastrophic failure and the presence of response forces, further limits the risk to the general public.

Transportation of waste products (after destruction of the VX) to an off-site TSDF would provide an opportunity for public exposure to these materials. The SCWO process would produce brine solutions, while the accelerated neutralization options would produce hydrolysates. The maximum number of shipments of hydrolysate (treated or untreated) would be less than the shipments of brine solution under the no-action alternative (see Sect.3.3.8.2). However, the hydrolysate would be more hazardous than the brine solutions.

Material shipped would be treated, as needed, to meet the acceptance requirements of the receiving TSDF and any shipping regulations. All shipments would be conducted under the same requirements as other similar types of industrial materials. There should be minimal opportunity for public exposure to the contents of the shipments.

As discussed in the previous section, rare external events might damage the processing units and release some of the VX being processed. However, this type of event could also occur if the no-action alternative were implemented.

The primary health risk to the public is the risk of accidental release of VX and a small danger to the public will exist until all the VX at NECD is destroyed. This risk will decrease with both no-action and the proposed action, as the VX is destroyed. The accelerated neutralization process would facilitate earlier destruction of the stockpile than the no-action alternative.

3.3.9 Cultural, Archaeological, and Historic Resources

The FEIS reports that an archaeological survey of the NECD property was performed in 1982, using a stratified sample technique and identifying 144 archaeological sites. None of these sites is within the proposed NECDF site, which is located in a previously disturbed area. A tour conducted for NECD in 1991 by the Indiana Division of Historic Preservation and Archaeology (IDHPA) found no individual structures or districts that were eligible for inclusion in the *National Register of Historic Places* (Ralston 1991). More recently, the IDHPA has determined that there are no known historical or archaeological sites listed in or eligible for inclusion in the *National Register* that would be affected by any projects at NECD.

3.3.9.1 No-action alternative

The FEIS determined that no potentially significant historical or archeological sites would be impacted by projects at NECD. The exemption from State Historic Preservation Office review (see Exhibit F-1 in the FEIS) has been extended through the end of 2004. All construction, including an above-ground tank farm, would occur within the NECDF site. The FEIS determined that the construction of the NECDF would have no impact on cultural, archaeological, and historic resources.

3.3.9.2 Proposed action

The proposed action would not require construction and operation of the SCWO. A facility for treating the hydrolysate for shipment to a permitted TSDF may be constructed in another NECDF building. Therefore, there would be no additional ground disturbance that would have any potential for impacts to historic or archaeological sites. A truck loading (transfer) facility would be constructed in accordance with hazardous waste management requirements to prevent spills and leaks. It would be located just west of the current UB to provide easy loading of hydrolysate and egress from the NECDF.

There are no buildings with historic status on NECD and the previously identified 144 sites are not located near NECDF. The impacts of any spills should be contained near the NECDF and not have a deleterious effect on any known sites of potential significance. Therefore, cultural resource impacts are not anticipated for either the no-action or proposed action alternatives. All construction, including an above-ground tank farm, would occur within the

NECDF site. The FEIS determined that the construction of the NECDF would have no impact on cultural, archaeological, and historic resources.

3.3.10 Environmental Justice

Executive Order 12898, *Federal Actions to Address Environmental Justice to Minority Populations and Low-Income Populations* (February 11, 1994), requires all federal agencies to identify and address, as appropriate, disproportionately high and adverse human health conditions or environmental effects of their programs, policies, and activities on minority and low-income groups.

The 1998 FEIS (U.S. Army 1998) concluded that there were no significantly large numbers of minority populations in the vicinity of NECD, although there were higher numbers of low-income populations in several jurisdictions in the area. However, the liquid effluents were not expected to affect the drinking water or food chain and thus not impact those groups who might consume more local fish and game.

A comparison of the 1990 Census data presented in the FEIS to the 2000 Census data seems to indicate an increase in the number of people in the study area belonging to minority racial or ethnic groups. However, it is likely that much of this difference results from a change in the way the Census Bureau gathers this data. Beginning with the 2000 Census, respondents with multi-racial backgrounds were allowed to indicate all the racial groups to which they belonged, where they had previously been allowed to report only one racial group affiliation. This change has been shown to produce an apparent increase in the number of racial minorities.

Recent data (see Table 3.3) indicate that the percentage of population identifying with minority racial or ethnic groups remains quite low and is lower than the overall percentages for the two states. The percentage in poverty near NECD is slightly higher than the State of Indiana as a whole, probably reflecting the rural characteristics of the area.

Due to the fact that individual TSDFs are not being evaluated in this EA, the Army will evaluate environmental justice issues during any subsequent TSDF contractor selection process.

3.3.10.1 No-action alternative

Under the no-action alternative, the brine from the SCWO process would be transported off-site to a TSDF. The SCWO effluent originally expected to flow into the river from the water treatment has been eliminated and, thus, will have no effect on the food chain. Any impacts from

Table 3.3. Minority[a] and low-income populations [b] residing in the five-county socioeconomic impact area (in percent)

Location	Black/ African-American	Alaskan Native/ American Indian	Asian	Hawaiian/ Pacific Islander	Other Race	Hispanic	Poverty status[c]	
							All ages	0–17
Indiana	8.5	0.3	1.0	0.03	1.6	3.6	10.0	14.1
Fountain Co.	0.1	0.2	0.2	0.006	0.3	1.1	9.8	14.2
Parke Co.	2.1	0.3	0.2	0.02	0.2	0.6	12.6	16.9
Vermillion Co.	0.3	0.2	0.1	0.02	0.2	0.6	10.3	20.1
Illinois	15.4	0.3	3.5	0.04	5.9	12.6	10.6	15.4
Edgar Co.	1.8	0.2	0.2	0.01	0.3	0.8	13.2	18.3
Vermilion Co.	10.7	0.2	0.6	0.02	1.5	3.0	14.0	19.5

[a]Data for 2000.

[b]1998 estimates.

[c]Average state poverty percentage (all ages) 1999-2000 for Indiana was 7.6"1.9, and for Illinois, 10.8"1.3 ("Percent of People in Poverty by State: 1998, 1999, and 2000," Table D, *Poverty in the United States:2000*, U.S. Census Bureau, Current Population Survey, Washington, D.C., March 1999, 2000, and 2001

Sources: "Geographic Comparison Table (GCT-PL. Race and Hispanic or Latino: 2000, Geographic Area: Illinois County," U.S. Census Bureau, Census 2000 Redistricting Data (P.L. 94-171) Summary File, Matrices PL1 and PL2, Washington, D.C. "Geographic Comparison Table (GCT-PL. Race and Hispanic or Latino: 2000, Geographic Area: Indiana—County," U.S. Census Bureau, Census 2000 Redistricting Data (P.L. 94-171) Summary File, Matrices PL1 and PL2, Washington, D.C. "Small Area Income and Poverty Estimates 1998 State and County FTP Files and Description," U.S. Census Bureau, Housing and Household Economic Statistics Division, Small Area Estimates Branch, Washington, D.C., Dec. 20, 2001.

brine spills should be confined to NECD and not affect the off-site population. Thus, it should have no disproportionate impact on the minority or low-income population.

3.3.10.2 Proposed action

The hydrolysate from accelerated neutralization options would be shipped off-site for disposal. The hydrolysate would undergo additional treatment at NECDF only if necessary to meet the acceptance criteria of a receiving TSDF. Spills of hydrolysate during transfer to trucks should also be confined to the site. Secondary treatment of the hydrolysate, if required, would further reduce the environmental impact of any spills. The off-site population near NECD should not be affected.

The tank storage option of the proposed action (see Sect. 2.3) would involve up to 1 million gal of storage on-site for the hydrolysate. The hydrolysate would be stored until it could be treated or shipped off-site for disposal (with or without secondary treatment). A catastrophic accident could cause a large hydrolysate spill, but the effects of the spill should be confined to the on-site area and not affect the off-site population.

3.3.11 Cumulative Effects

Cumulative impacts result when incremental impacts combine with those of other ongoing or planned activities in the same region to create a collectively significant impact. The potential for cumulative impacts is discussed in this section.

3.3.11.1 No-action alternative

The FEIS analyzed in detail the potential for cumulative impacts of the neutralization of VX and on-site SCWO treatment of the hydrolysate. The FEIS concluded that there was minimal-to-no potential for significant cumulative impacts with construction and operation of the neutralization/SCWO facility, as designed at that time.

In the only change since publication of the FEIS, the EC has been eliminated from the neutralization/SCWO process. Elimination of the EC would reduce the amount of construction required and the number of people required for construction and operation. It would also eliminate the only process effluent, approximately 1 gal per minute of EC treated water to the NECD Federally Owned Treatment Works and then to the Wabash River. The elimination of the

EC would, however, eliminate water recycling, requiring increased water use and increased off-site shipment of waste liquids.

Continual recharge is provided to the glaciofluvial aquifer by the Wabash River. The minimum flow is more that ten times the recommended withdrawal rate from the glaciofluvial aquifer for NECD, and more than a thousand times larger than the water demand of the neutralization/SCWO facility. Sufficient water would be available to recharge the glaciofluvial aquifer and to supply the NECDF even during a prolonged drought (U.S. Army, 1998). The increased water demand resulting from the elimination of the EC from the neutralization/SCWO process (see Section 3.3.2.2) would still be well within the recommended withdrawal rate.

The elimination of the EC under the no-action alternative would result in increased traffic on SR 63 and a related small increase in possibility for accidents. However, even with the increased traffic, the LOS rating of A would not be threatened. Therefore, it is expected that there would be no significant cumulative impacts to traffic levels in the area.

3.3.11.2 Proposed action

The cumulative impacts of the proposed action would be less than those of the no-action alternative, which are expected to be insignificant (Sect. 3.3.11.1). The proposed action would make use of redesigned portions of the NECDF, which is currently under construction. There would be minimal requirement for disturbance of additional previously disturbed land. Fewer personnel would be required for construction and operation than for the no-action alternative. The accelerated caustic neutralization option without SCWO would require less water because the SCWO treatment of hydrolysate is much more water intensive. Furthermore, accelerated neutralization (other then storage of hydrolysate for further development of SCWO) would involve lower traffic levels due to the smaller amount of process wastes to be shipped off-site.

3.4 REFERENCES

IDEM (Indiana Department of Environmental Management) 2002. *Technical Support Document for a Federally Enforceable Operating Permit, Newport Chemical Depot*, Office of Air Quality.

Illinois Department of Employment Security 2001. *Local Area Unemployment Statistics*, Springfield, Ill., Oct. 17.

Indiana Department of Transportation 1993. *1993 Annual Average Daily Traffic, Vermillion County*, Indianapolis, Ind.

Indiana Department of Workforce Development, undated. *Labor Force Statistics*, Indianapolis, Ind.

NRC (National Research Council) 1993. *Alternative Technologies for the Destruction of Chemical Agents and Munitions*, National Academy Press, Washington, D.C.

Parsons 2000. *Addendum to NECDF Brine Processing and Disposal Study*, prepared under contract DAAA 09-99-C-0016, CLIN 1403, by Parsons Corporation, Parsons Infrastructure and Technology Group, Pasadena, Ca., for the U.S. Army Corps of Engineers, Huntsville, Ala., and Product Manager for Alternative Technologies and Approaches, Aberdeen Proving Ground, Md., October.

Parsons 2001. *Newport Chemical Agent Disposal Facility: Post Treatment Alternatives Special Study*, prepared by Parsons Corporation, Parsons Infrastructure and Technology Group, Pasadena, Ca., for Product Manager for Alternative Technologies and Approaches, Aberdeen Proving Ground, Md., and U.S. Army Corps of Engineers Engineering and Support Center, Huntsville, Ala., June.

Ralston, P.R. 1991. Letter from P.R. Ralston, Indiana Department of Natural Resources, Division of Historic Preservation and Archaeology, to D.A. Lichtenberger, Newport Army Ammunition Plant, September 30.

U.S. Army 1988. *Chemical Stockpile Disposal Program Final Programmatic Environmental Impact Statement*, Vols. 1, 2, and 3, Program Executive Officer—Program Manager for Chemical Demilitarization, Aberdeen Proving Ground, Md., January.

U.S. Army 1998. *Pilot Testing of Neutralization/Supercritical Water Oxidation of Agent VX at Newport Chemical Depot, Indiana: Final Environmental Impact Statement*, Program Manager for Chemical Demilitarization, Aberdeen Proving Ground, Md., December.

U.S. Bureau of the Census 2001. *Census 2000, Summary File 1*, Washington, D.C.

4. CONCLUSIONS

This EA has been prepared by the U.S. Army to supplement the FEIS for pilot testing of caustic neutralization of agent VX stored at NECD followed by SCWO treatment of the resulting hydrolysate (U.S. Army 1998). It also presents a NEPA assessment of accelerated destruction of the entire NECD stockpile followed by off-site shipment of treated hydrolysate. The ROD for the FEIS determined that pilot testing of the neutralization/SCWO process should proceed at NECD. Accordingly, construction of the NECDF began. However, events occurring since the publication of the ROD have established the need for accelerated destruction of the stockpile to better protect the safety and well being of the public, NECD personnel, and the environment.

In the FEIS, the brine solution that would result from treatment of hydrolysate by the SCWO process was to be treated in an EC unit that would remove most of the water and produce distilled water and wet brines. Most of the water was to be recycled into the neutralization process. Subsequent studies showed that off-site disposal of the SCWO brines would be simpler operationally, and beneficial from both the cost and risk perspectives. The Army prepared a REC (Appendix A), which supports the elimination of the EC and shipment of the brine solution to an off-site TSDF. Thus, neutralization/SCWO without the EC is the no-action alternative in this EA. Subsequent testing of SCWO has revealed significant technical problems with the process. Therefore, SCWO will not be ready for use within the required time frame.

The proposed action in this EA is to destroy the entire NECD stockpile of agent VX by an accelerated neutralization process. Accelerated neutralization would accomplish destruction of the NECD stockpile in a much shorter time frame than no-action because it would employ a manual process for opening and draining the TCs by the use of CHATS. Through this manual process more TCs could be processed simultaneously. The liquid hydrolysate would then be disposed of at an off-site RCRA permitted TSDF or, as a possible backup option, stored in a 1 million gal above-ground tank farm to await further testing and evaluation of the SCWO process. In the latter case, the SCWO brines would be disposed of at an off-site TSDF.

Comparison of the potential impacts of the no-action alternative (neutralization/SCWO with off-site disposal of SCWO brines) and the proposed action (accelerated neutralization with off-site disposal of hydrolysate with or without further on-site secondary treatment) shows that the impacts of the proposed action, exception the option of storing the hydrolysate for eventual

treatment by SCWO, would be less than those of the no-action alternative. Although the accelerated option of storing the hydrolysate for SCWO processing would involve the construction of a tank farm and longer-term storage of hydrolysate, the potential impacts would be contained within the original NECDF footprint. Key comparative points are discussed in the following paragraphs.

The proposed action (without storage of hydrolysate) would produce lower emissions because there would be no need for long-term management of emissions from a tank farm, and the emissions produced by transporting a smaller volume of liquid wastes off-site would be reduced. No violations of air quality standards would be expected under either alternative.

The glaciofluvial aquifer is capable of providing sufficient water to accommodate either alternative. Because SCWO is very water intensive and the elimination of the EC eliminated water recycling from the neutralization/SCWO process, the proposed action would use less than 10% of the water requirements for the no-action alternative. A newly constructed diversion channel and detention basin would control precipitation runoff from the facility. There would be no release of process effluent with either alternative. Any leaks or spills, including failure of a storage tank, would be contained within a secondary containment system. The highly unlikely spill of brine solution or treated hydrolysate into a body of water during transportation could produce serious effects.

The NECDF site has already been prepared and construction is underway. No changes in land use, other than the land occupied by the NECDF itself would be expected under the proposed action. New facilities for accelerated neutralization would involve modifying existing on-site buildings. In this case, significant portions of the no-action design would not be required and would not be constructed. Taking into account the size and location of the NECDF site, a biological assessment submitted to the U.S. Fish and Wildlife Service in 1998 concluded that effects on threatened and endangered species, including the Indiana bat, from construction or operation of the NECDF are unlikely. Furthermore, the FEIS concluded that no potentially significant historical or archeological sites would be impacted.

The largest amount of solid waste produced by either alternative would be the TCs, which would be decontaminated and shipped to Rock Island Arsenal for smelting and recycling. However, storing the hydrolysate to allow continued development of the SCWO process would produce larger amounts of solid wastes than other accelerated neutralization options. The additional production of solid wastes would result from the disposal of carbon filters required for the tank farm, and the additional DPE wastes produced by additional maintenance during extended storage.

The no-action alternative (neutralization/SCWO) would produce by far the greatest volume of process liquid waste (about 15 million gal). Consequently, this option would also create the greatest amount of traffic during shipment of the SCWO effluent off-site. Accelerated neutralization followed by secondary treatment of the caustic hydrolysate to comply with TSDF acceptance criteria would produce about 1.3 million gal of process liquid wastes. Shipment of the raw hydrolysate following accelerated neutralization would involve an even more reduced volume and many fewer trips, but a significantly more hazardous material. Secondary treatment of the hydrolysate would significantly reduce the odor, pH, and toxicity of the material shipped.

The FEIS concluded that there would be no significant socioeconomic impacts from the increase in workers needed for construction and operation of the facility. The current no-action alternative would be expected to result in smaller impacts because of the elimination of the EC. Work forces for construction and operation of the accelerated neutralization facility are expected to be similar in size to those for no action. The alternatives are expected to result in approximately equivalent impacts.

The accelerated neutralization process could present a slightly greater potential risk to workers because of increased handling of the agent. However, these increased risks would be managed through administrative procedures and thorough training of the workers. Furthermore, the risks would be counterbalanced by the more rapid destruction of the agent VX, thus reducing risk to the pubic and the workers from potential releases associated with external natural events (earthquakes and tornadoes) and terrorism. In the case of hydrolysate storage, any leaks from the storage tanks would be contained by built-in containment and response procedures. Such an event would primarily affect on-site workers involved in cleanup. A fire associated with tank storage of hydrolysate could result in some toxic materials being carried off-site. The small probability of such an event, the distance to the nearest concentrations of population (2–3 miles), and the presence of trained response forces would limit the risk to the general public, as well as to minority and low-income populations. The FEIS concluded that there would be no disproportionate impact on the latter populations from construction and operation of a neutralization/SCWO facility. The proposed action would not present any significant change to this finding concerning the surrounding populations.

Based on the results of this EA, the U.S. Army concludes that accelerated destruction of the NECD stockpile via the proposed action would effectively and more quickly eliminate the existing risks associated with continued storage of agent VX, and would pose no substantial increased risks to the general public or the environment.

[This page intentionally left blank]

5. AGENCIES AND PERSONS CONSULTED

An extensive effort has been undertaken to inform the public of the Army's plan to accelerate the destruction of VX agent at NECD in response to the terrorist attacks of 11 September 2001. An informational public meeting was held on 21 May 2002 at the Newport Lions Club, Newport, Indiana.

In addition to presentations about the proposed accelerated program, the Army solicited comments from the audience and answered their questions. Issues raised by the public have been reviewed and incorporated (as appropriate) into the evaluations in this EA.

In addition to this public meeting, the Army has provided briefings to the following individuals and organizations:

- Federal elected officials
- Indiana and Illinois State elected officials
- Local elected officials
- Indiana Citizens Advisory Council
- NECD site personnel
- Chemical Stockpile Emergency Preparedness Project personnel
- State regulators
- Federal regulators
- Local media (print, radio, television)
- Interested citizens
- General population (through community newspapers and bulletins)

The following is a list of organizations/individuals contacted for comment on the draft EA:

Office of the Assistant Secretary of the Army, Installations and Environment
Mr. C. Russell H. Shearer, Special Assistant to the Assistant Secretary
Mr. Patrick Wakefield, Special Assistant to the Assistant Secretary

U. S. Army Environmental Law Division
Colonel Craig Teller and Mr. Robert Lewis

U. S. Army Soldier and Biological Chemical Command (SBCCOM)
Ms. Ruth Flanders, SBCCOM-Legal
Mr. Robert Martin, Risk Management Office

Project Manager for Alternative Technologies and Approaches (PMATA)
Dr. Richard Ward, Chief Scientist

Program Manager for Chemical Demilitarization—Environmental Management Office (PMCD-EMO)

Mr. Matthew Hurlburt, Permitting & Compliance Project Manager

Program Manager for Chemical Demilitarization (PMCD)

Mr. Phil Lower, Counsel, PMCD-Legal

Newport Chemical Agent Disposal Facility (NECDF) Government Site Office

Mr. Glen Shonkwiler, (PMATA), Chief Environmental Engineer NECDF
Mr. Kevin Rudduck, (PMATA), Production Engineer NECDF
Mr. Tom Hrastich, (PMATA), Chemical Engineer NECDF
Mr. Robert Kasper, (SAIC), Environmental Scientist NECDF

Newport Chemical Depot

Ms. Cathy Collins, (SBCCOM), Chief Engineer NECD
Mr. Len Helt, (M&H), Enviromental Engineer NECD
Mr. Randall Belstra, (SBCCOM), Chief of Security NECD

Parsons—Newport

Mr. Scott Rowden, Environmental Manager
Mr. Mike McKee, Environmental Compliance Specialist
Mrs. Latisha Egenolf, Environmental Engineer
Mr. Brian Elmiger, Process Development Engineer

Publishing of the final EA and the Draft Finding of No Significant Impact (FONSI) will be announced in newspapers near the Newport Chemical Depot and copies will be made available for public review at:

Newport Chemical Stockpile Outreach Office
140 South Main Street
Newport, Indiana 47966

Newport Public Library
350 East Market Street
Newport, Indiana 47966

Clinton Public Library
313 S. 4th Street
Clinton, Indiana 47842

Rockville Public Library
106 North Market Street
Rockville, Indiana 47872

Danville Public Library
319 North Vermillion Street
Danville, Illinois 61832

Vigo County Public Library
1 Library Square
Terre Haute, Indiana 47807

Dana Public Library
140 North Maple Street
Dana, Indiana 47847

Covington Public Library
622 5th Street
Covington, Indiana 47932

Montezuma Public Library
212 Crawford Street
Montezuma, Indiana 47862

This EA and FONSI will also be made available to the public in the areas around "candidate" treatment, storage and disposal facilities (TSDFs). The off-site disposal of chemical demilitarization wastes from Newport Chemical Depot is planned at one or more of these TSDFs. The repositories for the communities near these TSDFs are not being listed in this EA—to insure that the competitive bid process is not compromised. Listing of these repositories would allow "candidate" TSDFs to identify competitors that also received the proposal (RFP), and perhaps interfere with the intended fair and open procurement process.

[This page intentionally left blank]

APPENDIX A

Records of Environmental Consideration

[This page intentionally left blank]

RECORD OF ENVIRONMENTAL CONSIDERATION (REC)
NEWPORT CHEMICAL DEPOT

TO: Newport Chemical Depot	**REC NO:** Parsons/NECDF No. 3(1)
FROM: Parsons Infrastructure and Technology Group	**SIGNED:**
PROJECT TITLE: Removal of Evaporator / Crystalizer from NECDF Post Treatment System	

BRIEF DESCRIPTION:

Parsons Infrastructure and Technology Group has been awarded the contract for design, construction, and operation of the Newport Chemical Agent Disposal Facility (NECDF), located on the Newport Chemical Depot (NECD). The objective of the NECDF is to neutralize and destroy the entire stockpile of VX Chemical Warfare Agent currently being stored on the depot.

The conceptual design of this demilitarization facility included an "Evaporator / Crystalizer." This device would physically (through evaporation) remove excess water from the effluent waste stream of the facility, after the primary and secondary treatment processes have been completed, leaving a more concentrated industrial salt solution. Some of the removed water would then be discharged to the NECD WWTP.

A technical study performed to evaluate the overall value of the Evaporator / Crystalizer has found it to be unnecessary and not cost effective. Therefore, it was recommended for removal from the NECDF design. A modification to the RCRA Permit was approved on April 23, 2001. In addition, NECDF will no longer discharge any process wastes to the NECD WWTP, thus eliminating the need for a NPDES Permit. All wastes will go off-site to an authorized TSDF. These wastes will no longer be listed hazardous wastes—as treatment in the SCWO allows "delisting" of this agent-derived waste (i.e., no longer Indiana listed waste--I001). Approval of delisting petition was provided in IDEM letter, dated June 18, 1999, subject: VX Delisting Petition Newport Chemical Depot, IN1210022272.

NOTE: This activity is categorically excluded through the screening criteria as identified below.

PROJECTED DATE OF POPOSED ACTION: April, 2001 (RCRA Permit Modification approved)

REASON FOR USING RECORD OF ENVIRONMENTAL CONSIDERATION (choose one):

☐	**Adequately covered in an (EA, EIS) entitled:** **and dated:** **The EA/EIS may be viewed at:**
☒	**Is categorically excluded under the provisions of CX A-30 & A-31, AR 200-2, Appendix A, (and no extraordinary circumstances exist as defined in paragraph 4-2), because:** Removal of the Evaporator / Crystalizer does not fail any of the screening criteria in A-30 & A-31. The removal of this physical process from the NECDF Post Treatment System does not have any significant environmental impact.

Date: 9 Apr 02	**NECDF Site Project Manager** **APPROVED:**
Date: 4/9/02	**Representative of Mason & Hanger, Inc.** **APPROVED:** Leonard O. Holt
Date: 9 APR 02	**Environmental Coordinator, NECD** **APPROVED:**
Date: 10 Apr 02	**Commanding Officer, NECD** **APPROVED:**

NECD FORM 786 (8/97)

[This page intentionally left blank]

RECORD OF ENVIRONMENTAL CONSIDERATION (REC)
NEWPORT CHEMICAL DEPOT

TO:	Newport Chemical Depot	REC NO:	Parsons/NECDF No. 5
FROM:	Parsons Infrastructure and Technology Group	SIGNED:	Scott E. Ponder
PROJECT TITLE:	Construction of an accelerated caustic neutralization process for VX agent at Newport Chemical Depot		

BRIEF DESCRIPTION:
This action is for construction of an accelerated caustic neutralization process for VX, located on the Newport Chemical Depot (NECD). The accelerated process uses similar, but less complex and less automated processes, than the previously permitted Newport Chemical Demilitarization Facility (NECDF). The accelerated caustic neutralization process will be constructed within the original location for the NECDF, as described in the 1998 Final Environmental Impact Statement (FEIS). The FEIS determined there were no significant impacts associated with construction of the NECDF at this location, and the accelerated caustic neutralization processes and waste streams are similar.

Construction of the accelerated process will include the use and/or modification of NECDF structures and equipment. New construction will involve modifying existing on-site buildings to house the equipment necessary to implement the accelerated caustic neutralization process. New construction will also include installation of hydrolysate storage tanks and treatment equipment but is less than was required for the original NECDF design.

NOTE: This project is not considered to be "regionally significant" under 40 CFR 51.583(i). Supporting documentation and checklists are attached. The operations and off-site disposal of the hydrolysate will be evaluated in an Environmental Assessment (EA) currently being prepared. This EA will effectively update and modify the Environmental Impact Statement (FEIS) that was originally prepared.

PROJECTED DATE OF PROPOSED ACTION: June, 2002

REASON FOR USING RECORD OF ENVIRONMENTAL CONSIDERATION (choose one):

☐	**Adequately covered in an (EA, EIS) entitled:** **and dated:** **The EA/EIS may be viewed at:**
☒	**The conformity determination is an exempt action under 40 CFR 51.853(c)(1) and 40 CFR 51.853(c)(2)(x) because:** Estimates indicate no increase in emissions. Actions associated with new construction are reduced but similar in scope to the originally planned NECDF construction activities. Original NECDF construction was evaluated in the FEIS and found to be insignificant environmentally.

Date: 3 June 2002	**NECDF Site Project Manager** **APPROVED:** Charles D. Galloway
Date: 6/3/02	**Representative of Mason & Hanger, Inc.** **APPROVED:** Leonard A. Holt
Date: 11 JUNE 02	**Environmental Coordinator, NECD** **APPROVED:** [illegible]
Date: 11 June 2002	**Commanding Officer, NECD** **APPROVED:** Joseph F. Marquardt

NECD FORM 786 (8/97)

RECORD OF ENVIRONMENTAL CONSIDERATION for CONSTRUCTION OF AN ACCELERATED NEUTRALIZATION PROCESS FOR VX AGENT AT NEWPORT CHEMICAL DEPOT

Description of Proposed Action:

The proposed action is the construction of an accelerated caustic neutralization process, for the treatment and destruction of VX agent. The accelerated caustic neutralization process uses similar, but less complex and less automated processes, than the original or baseline NECDF. The caustic neutralization process will be constructed within the original location of the NECDF, as described in the 1998 Final Environmental Impact Statement (FEIS). The FEIS determined there were no significant impacts associated with construction of the NECDF at this location, and the accelerated caustic neutralization processes and waste streams are similar. Indiana Department of Environmental Management (IDEM) and the Department of the Army (DA) have agreed that accelerated caustic neutralization process will operate under the 40 CFR 262.34 accumulation (≤ 90 days) regulations for the treatment and storage of hazardous wastes and will not require a RCRA permit. Long-term storage of RCRA wastes, if necessary, would require modification of the existing NECD/NECDF RCRA permit.

Construction of the accelerated caustic neutralization process will include the use and/or modification of existing NECDF structures and equipment in combination with the installation of modular treatment process equipment for the caustic neutralization process. The caustic neutralization process is essentially the same as the baseline or original process. However, robotics and remotely controlled operations have been replaced with gloveboxes used to manually handle and process the VX stored in the TCs.

With construction of the accelerated process, significant portions of the NECDF design will no longer be required and will not be constructed. This reduces the net overall construction impact, as the impact of constructing the accelerated process is significantly less than that required to complete the NECDF, and the overall construction period will be reduced approximately 18-24 months.

The operation of the accelerated process and the off-site shipment of hydrolysate are being evaluated in an Environmental Assessment (EA), prepared by Oak Ridge National Labs (ORNL). This EA is to be completed by September 2002 prior to start of operations. Further details of the proposed process are provided below for informational purposes.

Summary of Impacts:

The accelerated caustic neutralization process will utilize some of the same buildings and equipment included in the original NECDF process. However, approximately three (3) major buildings included in construction of the original/baseline design will probably not be constructed (i.e., Solid Waste Storage, Personnel Maintenance, and SCWO Buildings). The environmental impacts associated with the NECDF construction and initial operations were

analyzed in the FEIS. It was determined that there were no significant impacts associated with initial construction and operations (i.e., during the pilot test process), therefore significant impacts will not result from the reduced construction required for completing the accelerated caustic neutralization process. An EA for the operation of the accelerated caustic neutralization process for environmental impacts will be completed prior to initiation of neutralization operations at the accelerated NECDF.

NECD NATIONAL ENVIRONMENTAL POLICY ACT CHECKLIST

for

Construction of an Accelerated Neutralization Process for VX Agent at Newport Chemical Depot

NOTE: Signature of the accompanying Record of Environmental Consideration (REC) and completion of this checklist by the proponent constitutes thorough review of all possible factors listed below. Check each box that is applicable for the proposed action.

1. Does the proposed test or action potentially involve the following:

[ ] Yes	[X] No	[ ] NA	Clearing/Removing Trees
[ ] Yes	[X] No	[ ] NA	Intrusive Activities
[ ] Yes	[X] No	[ ] NA	Filling of wetlands
[ ] Yes	[X] No	[ ] NA	Asbestos abatement
[ ] Yes	[X] No	[ ] NA	Disturbance to rivers, bay, inlets, ponds, etc
[ ] Yes	[X] No	[ ] NA	Solid waste management units (SWMUs)
[X] Yes	[ ] No	[ ] NA	Environmental or safety permits
[ ] Yes	[X] No	[ ] NA	Exceptional loud noises
[ ] Yes	[X] No	[ ] NA	Lead abatement
[X] Yes	[ ] No	[ ] NA	Design review
[X] Yes	[ ] No	[ ] NA	Building modification
[ ] Yes	[X] No	[ ] NA	Building demolition
[ ] Yes	[X] No	[ ] NA	Site approval from DPW
[ ] Yes	[X] No	[ ] NA	Design review from DPW

2. Will there potentially be an effect on the following as a result of the proposed test or action, or will a known/suspected violation of an environmental regulation result?

[X] Yes	[ ] No	[ ] NA	Airborne particulates
[X] Yes	[ ] No	[ ] NA	Airborne vapors
[X] Yes	[ ] No	[ ] NA	Liquid wastes
[X] Yes	[ ] No	[ ] NA	Noise
[ ] Yes	[ ] No	[X] NA	Radiation
[ ] Yes	[ ] No	[X] NA	Pesticides
[X] Yes	[ ] No	[ ] NA	Hazardous materials
[X] Yes	[ ] No	[ ] NA	Hazardous wastes
[ ] Yes	[X] No	[ ] NA	Wildlife habitat
[ ] Yes	[X] No	[ ] NA	Historic building
[X] Yes	[ ] No	[ ] NA	Utilities usage
[X] Yes	[ ] No	[ ] NA	Erosion
[X] Yes	[ ] No	[ ] NA	Stormwater run-off
[X] Yes	[ ] No	[ ] NA	Odors
[X] Yes	[ ] No	[ ] NA	Solid wastes
[ ] Yes	[ ] No	[ ] NA	Other -

3. Any "Yes" checked boxes from above must be explained

Intrusive activities – No additional intrusive activities will be needed (for construction) beyond those identified in the FEIS.

Environmental permits – The accelerated neutralization process will develop operating procedures during the construction phase for compliance with 40 CFR 262.34, ≤ 90 day storage/treatment of hazardous wastes in containers and tanks. Therefore, no RCRA permit is needed for the construction of the VX treatment areas. The NECD FESOP has conditions and emission limits for construction activities with which construction will comply. RCRA waste storage following neutralization will require a future modification to NECD's RCRA permit. Areas used for this storage have been built or are being constructed. These areas are RCRA compliant or will be retrofitted to allow for RCRA storage. Construction of the accelerated neutralization process can proceed without the approved waste storage permit modifications.

Design review – All process and equipment design associated with the accelerated neutralization process will be reviewed by PMATA and the Corps of Engineers.

Building modification – The Utility Building (UB) and the Process Auxiliary Building (PAB) will be redesigned (from the original NECDF design) and modified to accommodate the accelerated neutralization process.

Airborne particulates – Fugitive particulates (dust) associated with construction and truck traffic will occur, but will not result in a violation. Fugitive dust is listed as an insignificant activity in the FESOP.

Airborne vapors – Emissions from gasoline/diesel fueled IC engines related to construction activities, other than mobile equipment, has conditions and limits in the NECD FESOP. No violations are expected.

Liquid wastes – Spent solvents, and laboratory liquid wastes may be generated during construction of the accelerated neutralization process. These liquid wastes will be managed as hazardous wastes in accordance with RCRA regulations. No violations are expected.

Noise – Portable generators, pumps, light units, and heavy construction equipment and vehicles will be used during construction.

Hazardous materials – Construction may involve the use of hazardous materials such as solvents, sealants, fuels, and other construction related activities. No violations are expected.

Hazardous wastes – Wastes may be generated from spills/leaks and excess chemicals that are no longer needed for construction. Appropriate hazardous waste determinations will be performed and no violations are expected.

Utilities usage – Water and electrical power are available for construction activities in the post-neutralization areas of the project.

Erosion – Erosion of disturbed areas due to stormwater may occur during the construction phase. Appropriate stormwater control measures have been and will be installed in accordance with an approved erosion control plan. No violations are expected.

Stormwater run-off – Appropriate stormwater control measures have been and will be installed in accordance with an approved erosion control plan. In addition, a stormwater retention pond has been constructed and is in-use during construction. No violations are expected.

Odors –Neither Indiana nor Vermillion County have odor control regulations, and no unusual odors should be generated due to construction.

Solid wastes – Solid wastes are expected to be generated such as general trash, scrap metal, used paint, aerosol cans, petroleum/soil cleanup residue, etc. Provisions have been made for handling these wastes during construction.

4. If the proposed test or action will generate solid or hazardous waste, wastewater, or air emissions, describe how the test or action has been designed to reduce the volume of the waste or emissions.

Responsibility for minimizing the generation of hazardous wastes associated with construction has been delegated to construction subcontractors, with oversight by Parsons. In addition, it is required that subcontractors obtain Parson's approval before bringing hazardous materials onto the site.

No process wastewater will be generated during the construction phase. Stormwater runoff controls are or will be in-place.

Fugitive particulates (dust) will be generated during construction from grading, contouring, and construction equipment traffic. Roadways will be watered as needed to control dust. Fugitive dust is listed as an insignificant emission source in the NECD FESOP.

[This page intentionally left blank]

APPENDIX B

Physical, Chemical, and Toxicological Characteristics of Products of VX Hydrolysis

B.1 PHYSICAL AND CHEMICAL CHARACTERISTICS

The physical characteristics and chemical makeup of the hydrolysate resulting from the neutralization of VX with sodium hydroxide (NaOH) illustrates some of the challenges in dealing with large quantities of the material (Table B.1). It has an odor, a low flash point, caustic nature, and an organic layer. The chemical constituents of the hydrolysate are shown in Table B.2, prior to any dilution. Concentrations after dilution with hydrolysate from the container cleanout processes would be about half that shown in the table (Parsons 2000). No detectable VX is present in the hydrolysate.

Table B.1 Physical characteristics of VX hydrolysate

Characteristic	Value
Organic layer	2% to 5% (vol%)
Flash point (organic layer)	~127°F
Flash point (aqueous layer)	>200°F
Odor	Strong
PH	>12
Density	~1.7
Total suspended solids	<1%
Total dissolved solids	2% to 4%
BTU per pound	~2160
Pumpable	100%

Source: Newport Chemical Agent Disposal Facility: Addendum to NECDF Brine Processing and Disposal Study, Post Treatment Alternatives Special Study, prepared for Product Manager for Alternative Technologies and Approaches, Aberdeen Proving Ground, Md., and U.S. Army Corps of Engineers Engineering and Support Center, Huntsville, Ala., October, June 2000, Table 2-2.

Table B.2 Chemical composition of VX hydrolysate

Chemical	Concentration (mg/L)
Ethyl methylphosphonic acid (EMPA)	152,673
Methylphosphonic acid (MPA)	13,348
Diisopropylaminoethanethiol (RSH or VX thiol)	160,000
Bis (diisopropylaminoethyl) disulfide (RSSR)	13,000
Bis (diisopropylaminoethyl) sulfide (RSSR)	970
1,9-bis (diisopropylamino)03,4,7-trithianonane	1,700
Total organic carbon (TOC)	140,000
Sulfate	96.9
Phosphate (as phosphorus)	2.19
Total sulfur (S)	38,400
Total phosphorus (P)	37,700
Arsenic (As)	0.125
Barium (Ba)	0.236
Calcium (Ca)	121
Chromium (Cr)	1.38
Copper (Cu)	1.53
Iron (Fe)	2.97
Lead (Pb)	0.50
Magnesium (Mg)	2. 79
Mercury (Hg)	0.004
Selenium (Se)	2.0
Sodium (Na)	87,900
Titanium (Ti)	0.25
Zinc (Zn)	0.25

Source: Newport Chemical Agent Disposal Facility: Addendum to NECDF Brine Processing and Disposal Study, Post Treatment Alternatives Special Study, prepared for Product Manager for Alternative Technologies and Approaches, Aberdeen Proving Ground, Md., and U.S. Army Corps of Engineers Engineering and Support Center, Huntsville, Ala., October, June 2000, Table 2-1.

B.2 TOXICITY

Toxicological screening of VX hydrolysate was conducted in 1996 with male mice. A mixed or homogenized sample, a sample from the top layer, and a sample from the bottom layer of the hydrolysate were injected intravenously in mice. No detectable VX remained in the hydrolysate. The 24-hr LD_{50}s for the mixed or homogenized samples were 192.3–220.4 mg/kg,

while the LD_{50}s for the bottom layers were 159.8–176.4 mg/kg. The top layer of the hydrolysate was the most toxic to the mice, with LD_{50}s from 26.4–44/6 mg/kg. In all cases, the hydrolysate was at least 1,800 times less toxic than the VX. The 24-hr intravenous LD_{50} for mice was assumed to be 0.0141 mg/kg for these comparisons (Manthei et al. 1996).

The toxic symptoms and speed of the onset of the symptoms in mice suggested that the toxic effects were probably the effect of the high pH (~14) and salts produced by the neutralization reaction. Five-percent hydrolysate samples that had been treated with UV/H_2O_2 and neutralized with sodium sulfite (Na_2SO_3) or catalase produced 24-hr LD_{50}s of greater than 10,000 mg/kg (more than 700,000 times less toxic than VX) (Manthei et al. 1996).

B.3 REFERENCES

Manthei et al. 1996. Manthei, James H., Dale H. Heitkamp, Ruth A. Way, Dean M. Bona, and Lee. C. B. Crouse, *Intravenous Toxicological Evaluation of Fourteen VX Decontamination By-Products in Institute of Cancer Research (ICR) Mice*, U.S. Army Edgewood Research, Development and Engineering Center, Aberdeen Proving Ground, Md., November.

Parsons 2000. *Addendum to NECDF Brine Processing and Disposal Study*, prepared under contract DAAA 09-99-C-0016, CLIN 1403, by Parsons Corporation, Parsons Infrastructure and Technology Group, Pasadena, Ca., for the U.S. Army Corps of Engineers, Huntsville, Ala., and Product Manager for Alternative Technologies and Approaches, Aberdeen Proving Ground, Md., October.

[This page intentionally left blank]

APPENDIX C

Acquisition Decision Memorandum

[This page intentionally left blank]

THE UNDER SECRETARY OF DEFENSE

3010 DEFENSE PENTAGON
WASHINGTON, DC 20301-3010

ACQUISITION, TECHNOLOGY AND LOGISTICS

MAY 11 2002

MEMORANDUM FOR SECRETARY OF THE ARMY

SUBJECT: Accelerated Disposal of the Chemical Weapons Stockpile at Newport, Indiana – Acquisition Decision Memorandum (ADM)

Due to increased security concerns in the wake of the terrorist attacks against the United States on September 11, 2001, I approve an accelerated approach to disposal of the chemical weapons stockpile at Newport, Indiana. This accelerated approach involves modification of the pilot program at Newport.

I authorize the Army to proceed immediately with the construction of a Chemical Agent Neutralization Facility employing a caustic neutralization process. This decision is based, in part, on my consideration of the Final Environmental Impact Statement for Newport for the construction of disposal facilities for the accelerated destruction of chemical agents and munitions. I further direct the Army to provide to me a completed environmental analysis for the off-site shipment of secondary waste and the operations phase of neutralization at Newport before commencing operations.

The Army may commence neutralization of the stockpile as soon as the process equipment and enclosures have been cleared through the operational readiness evaluation, the environmental analysis mentioned above has been completed, and all Chemical Weapons Convention (CWC) pre-destruction notification timelines have been met. Construction and operation of this facility shall comply with the requirements to be negotiated with environmental regulators. Funding sources from within the program's Newport allocation are to be utilized in executing the accelerated program at Newport.

I direct the Army to take all necessary steps to execute the accelerated program, to include ensuring safety and environmental compliance and providing funding. Further, the Army should develop and propose associated congressional language to provide for the additional CWC-related costs. The Army shall also communicate with appropriate federal, state, and local entities, including the congressional defense committees and other interested Members of Congress concerned with the Chemical Demilitarization Program.

This ADM constitutes the Milestone III decision for Newport. After consultation with me, any associated acquisition documentation may be streamlined to meet management needs.

[This page intentionally left blank]